NO. 70 NOTES FROM THE SHOP $3.95

# Woodsmith®

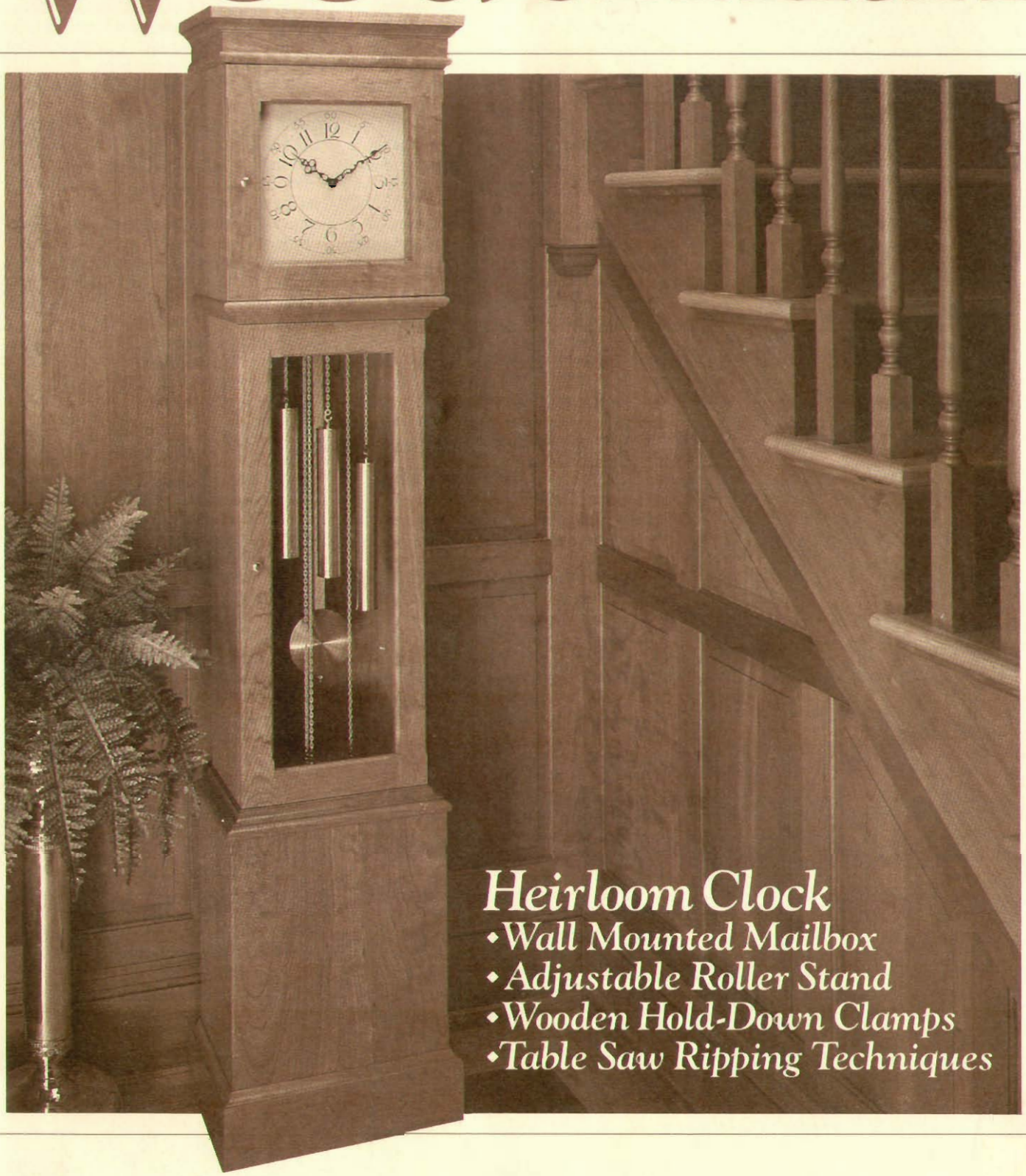

## Heirloom Clock

- Wall Mounted Mailbox
- Adjustable Roller Stand
- Wooden Hold-Down Clamps
- Table Saw Ripping Techniques

No. 70 August, 1990

Woodsmith

Editor Donald B. Peschke
Design Director Ted Kralicek
Managing Editor Douglas L. Hicks
Assistant Editors Terry J. Strohman, James M. Dolan, Richard S. Peters, Gordon Gaippe
Project Designer Ken Munkel
Illustrators David Kreyling, Cary Christensen, Rod Stoakes, Chris Glowacki
Graphics Director Jon Snyder
Project Supplies Leslie Ann Gearhart
Customer Service Mgr. Linda Morrow
Customer Service Linda Jones, Kelly Bradford, Scott Rhodes, Genelle Branson, Vicki Edwards, Mic Smith, Jennie Enos
Controller Paul E. Gray
Bookkeeping Linda O'Rourke
Computer Operations Ken Miner
Network Administrator Douglas M. Lidster
Administrative Assts. Cheryl A. Scott, Sandy Baum
Sourcebook Jean Myers, Kent A. Buckton
Shop Manager Steve Curtis
Building Maintenance Ken Griffith, Archie Krause
Store Managers:
Berkeley, CA Michael DeHaven
Des Moines, IA Kent Welsh

**Woodsmith** (ISSN 0164-4114) is published bimonthly (Feb., April, June, Aug., Oct., Dec.) by Woodsmith Publishing Co., 2200 Grand Ave., Des Moines, IA 50312.
**Woodsmith** is a registered trademark of Woodsmith Publishing Co.
**©Copyright 1990** by Woodsmith Publishing Company. All rights reserved.
**Subscriptions:** One year (6 issues) $15.95. Two years (12 issues) $27.95. Canada/Foreign: add $2.00/year, U.S. funds. Single copy: $3.95.
**Second Class Postage Paid** at Des Moines, IA and at additional offices.
**Postmaster:** Send change of address to *Woodsmith*, Box 10718, Des Moines, IA 50350.
**Subscription Questions?** Call 800-333-5075 8:00 am to 5:00 pm, Central Time, weekdays.

EDITOR'S COLUMN

# Sawdust

I have a friend who's been working on a grandfather clock for 12 years. He finally got it done a couple of weeks ago — and it was worth the wait.

The clock is made of solid walnut with walnut burl, and it incorporates a lot of details, including an arched top, four burl-covered columns at the corners, and custom-cut moldings everywhere.

Seeing that clock got me interested in building one myself. But I wanted a design that I could handle in something less than 12 years.

The design I settled on is based on a Shaker Tall Case Clock. (We're not referring to it as a Shaker design because it's not a true reproduction.)

The minute I started building the clock, I wondered why I had put this project off for so long. The answer was simple. I have always felt that a clock like this was a major project — that would take months, if not years to complete. (My friend's 12-year ordeal obviously had an effect on me.)

But, if you break it down, a tall case clock is just boxes stacked on top of each other — a base, pendulum case, and head case.

The way we designed it, there are six frames with molded edges that separate these three main cases, as well as the crown molding at the top and kickboard at the bottom. So, in reality, if you can cut molding and make boxes, you can build this clock.

**CUSTOMER SERVICE.** We are in the process of changing all of our subscriber files to a new, updated system. It's going to enable us to do a lot of things better and faster with your subscription. And, it will also help with processing orders for back issues and project supplies.

The only problem is that there will be a change-over period. Between now and August 20th we will *not* be able to access your *subscription* records in the computer.

Note: If you have recently placed an order for back issues or project supplies from us, these records are *not* affected. So, if you have a question about a mail order, we will be happy to serve you.

If all goes well with the conversion, after August 20th we will be able to serve you better and faster.

**SCHEDULE.** Speaking of better and faster I have great news concerning the publishing schedule for *Woodsmith*.

Long-time subscribers know that we have had a struggle getting *Woodsmith* out on schedule. (In fact, it got so bad that in 1987 the August issue wasn't mailed until October.) For the past 18 months we've been working hard to catch up.

We finally did it. This issue (August 1990) will be in the mail on August 1st. (You should receive it 10 days to two weeks later, depending on mail delivery in your area.)

I want to thank you for being patient while we were trying to get caught up. I know it can be frustrating to have to wait for an issue, but you won't have to wait any longer.

**NEW FACES.** Rick Peters was one of the early subscribers to *Woodsmith*. He started with issue No. 4 back in 1979. Considering that we only had 676 subscribers back then, and now we have about 285,000, he is one of the few originals around.

Why the big deal about Rick? Well, he's just joined our staff as an assistant editor. When we first interviewed Rick, it certainly helped that he was very familiar with all the projects that have appeared over the years.

But I knew he was a true woodworker when he told me that as a kid he used to ask for tools instead of toys at Christmas. When he got his first set of tools, he began modifying his parent's coffee table. Soon thereafter his tool box was reduced to a ruler.

Now he has a full complement of tools and the ability to help us produce our new 32-page expanded version of *Woodsmith*.

**ANOTHER NEW FACE.** Also joining us is Gordon Gaippe. Gordon comes from a background of broadcast journalism and his own woodworking business. And he also is also a long-time *Woodsmith* subscriber.

He was employed for 18 years with the Voice of America in Washington D.C., and for a time he was a correspondent at the United Nations. But he also ran his own wooden toy company, and worked as a finish carpenter for an interior designer (his wife, Laurie).

The first thing on Gordon's list here is to organize the Tips & Techniques section of *Woodsmith*. Right now we are planning a series of contests for tips sent in by readers. Gordon will announce the first contest in the next issue.

**NEXT ISSUE.** The October issue of *Woodsmith* (No. 71) will be mailed (on time) during the week of October 1, 1990.

Don

A LOOK INSIDE

# Contents


**Tips & Techniques** 4 *Great tips from fellow woodworkers: 1)Router Mortising Jig. 2)Horizontal Boring on the Mortising Table. 3) Splitter Insert. 4) Quick Tips.*

**Tall Case Clock** 6 *We built this Tall Case Clock out of cherry wood and designed it to be welcome in any house. It's sure to become a treasured heirloom.*

**Talking Shop** 15 *We give some tips from our shop on how to plane thin stock with a power planer. And examine the pros and cons of working with a sabre saw.*

**Shop Notes** 16 *1) Routing Along the Edge of a Workpiece. 2) A Miter and Spline Joint. 3) Making and Using a Featherboard.*

**Roller Stand** 18 *A welcome addition to any shop, this adjustable-height roller stand is simple and inexpensive to build.*

**Mailbox** 24 *The frame-and-panel door of this mailbox pulls down to reveal a convenient bin for letters and magazines.*

**Tools & Techniques** 28 *Ripping on the Table Saw: How to set up your table saw to rip boards accurately and safely.*

**Hold-Down Clamp** 30 *Every shop should have a few of these handy clamps. They're easy to make and very versatile.*

**Sources** 31 *Hardware and project supplies needed for the projects in this issue.*


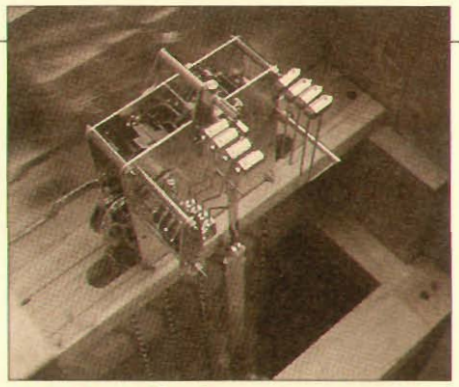

*Tall Case Clock* *page 6*

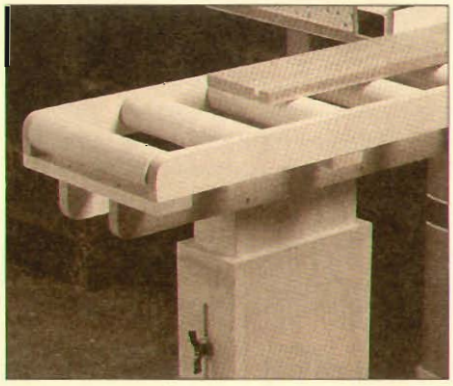

*Roller Stand* *page 18*

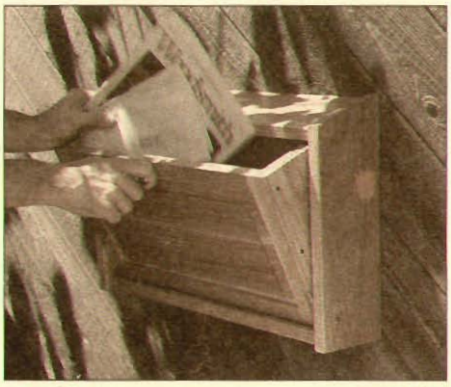

*Mailbox* *page 24*

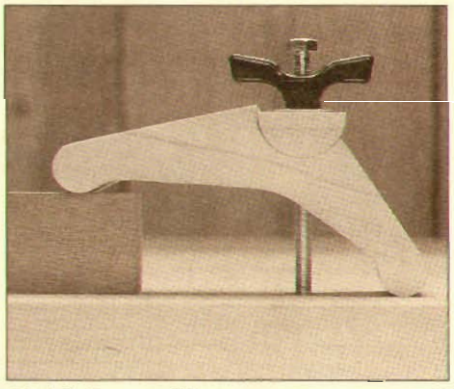

*Hold-Down Clamp* *page 30*

# Tips & Techniques

## ROUTER MORTISING JIG

■ Faced with having to rout 36 perfectly centered mortises for a recent project, I developed a simple jig that keeps the router bit centered over the workpiece. The jig consists of two bolts extending out below the base plate of the router, see Fig. 1.

These bolts straddle the workpiece and are held in position by slightly rotating the router, refer to Fig. 3.

Some router bases have existing threaded holes to accept machine bolts. Just screw in the bolts and cut off the heads.

If your router base doesn't have threaded holes, you can make a new base out of ¼" clear Plexiglas or Masonite. To do this, first trace and cut out the shape of your existing base plate on the new plate. Then drill out a ¾" center hole for the bit. Next, drill oversize counterbored holes to mount the base to your router and allow for minor adjustments, see Fig. 2b.

Then, on the back side of the base, drill two counterbored holes to accept the heads of the ¼" machine bolts on a line 45° from the axis of the router's handles, see Fig. 2. Then epoxy the bolts in place, see Fig. 2a.

Next, insert a ¼" straight bit in the router and mount the base plate so the bit aligns with the bolts and is centered exactly between them.

If a mortise is required at the end of the stock, extend the workpiece to support the bolts by putting a piece of stock in the vise that's the same thickness as the workpiece, see Fig. 3.

*Maynard Child*
*Williston, Vermont*

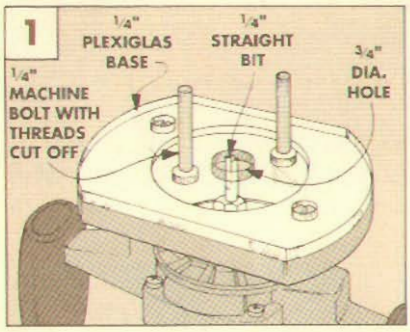


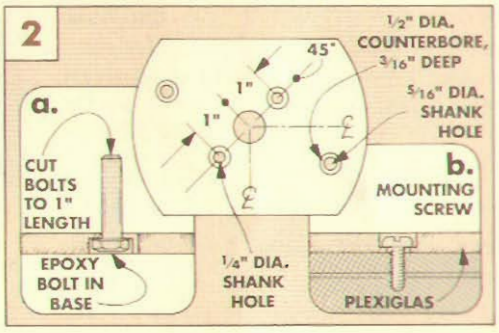


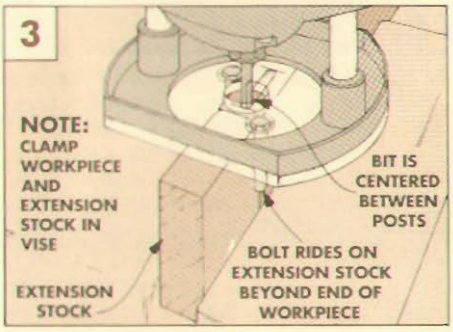


## HORIZONTAL BORING REVISITED

■ I made the Mortising Table in *Woodsmith* No. 67 and I am pleased with the accuracy and ease with which I can now rout mortises.

However, I am unable to resist chiding you about another use for the Mortising Table which you failed to mention, i.e. horizontal boring. I refer you to *Woodsmith* No. 12, in which you featured a horizontal boring jig that is somewhat similar to the Mortising Table.

If you replace the router on the Mortising Table with a Portalign Drill Guide and an electric drill, it can be used to bore horizontal holes (to make dowel joints, for example). To do this, I simply bolted my Portalign Drill Guide to the base plate in place of the router, see Fig. 1.

Adjusting the base plate on the Mortising Table up or down locates the height of the drill bit in relation to the workpiece, see Fig. 2. And the Portalign's stop collar can be used to control the depth of the hole.

To help align the drill bit correctly, I scribed a centerline on the guard plate.

Since the boring action tends to push the stock away from the fence, I clamp the workpiece to the table or clamp an auxiliary guide to the table, see Fig. 3.

One more tip: When boring into the end of a piece, clamp it to a miter gauge to keep it perpendicular to the back panel of the Mortising Table.

To make it easier to change from mortising to horizontal boring, I have a base plate for my Portalign and another for my router. Now I just switch to the base plate with the desired tool already attached.

*R. A. Porter, M. D.*
*Hendersonville, NC*

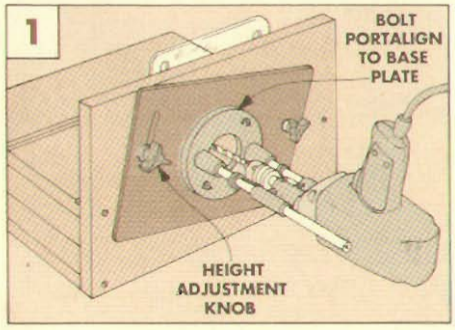


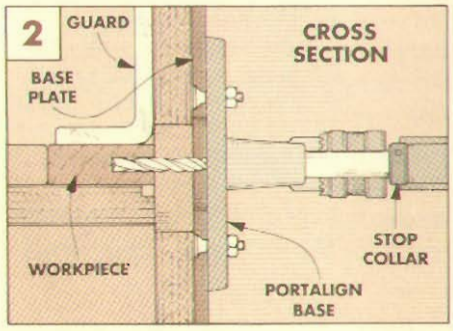


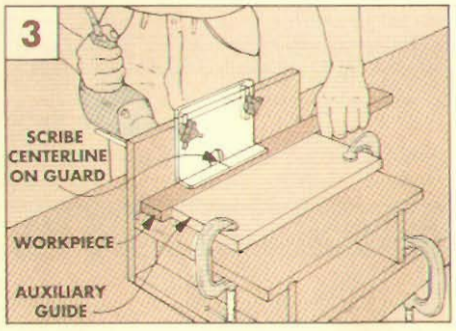

## SPLITTER INSERT

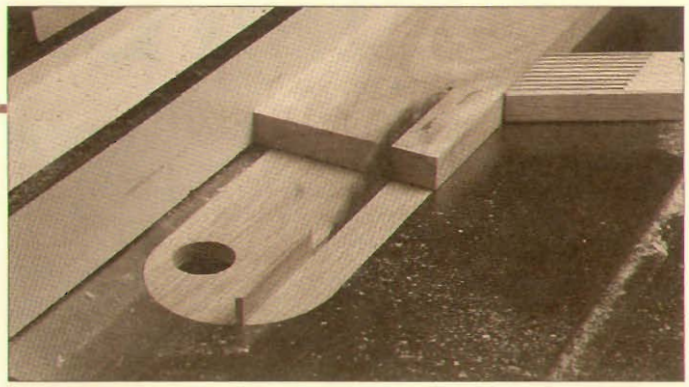

■ To reduce kickback and wood binding and burning on the back of my table saw blade when ripping, I designed a splitter that works better than the splitter that came with my saw. The original splitter is thinner than my saw blade which allows the kerf to close-up slightly after the wood passes the blade. My new splitter maintains the exact width of the saw kerf.

To make the splitter, begin by making a new insert. To do this, resaw or plane a blank to the thickness of the insert opening in the saw table so the new insert will lie flush with the table top. Next, trace the outline of the original insert onto the blank and rough cut it to within 1/16" of the pencil line, see Fig. 1.

To trim the new insert to the exact shape of the original, I used the original as a template. Attach it to the new insert with carpet tape. Then mount a flush trim bit in the router and, with the bearing riding along the original insert, trim the new one to shape, see Fig. 1a. Without a flush trim bit, file or sand the insert until it fits the opening.

To rip the blade slot in the new insert, carefully align the fence with the edge of the original insert, see Fig. 2. Then rip the slot, turning off the saw when you're 3" from the end of the new insert.

To make the splitter, rip a piece of stock to the exact thickness of the saw blade, 1" high and 3" long. Sand the end that will be closest to the blade to a point, and then glue the splitter into the slot, see Fig. 3.

Finally, to make it easier to get the insert in and out of the saw table, drill a finger hole in the new insert, see Fig. 3.

*Bruce J. Johnston*
*Salinas, California*

*Editor's Note: For more on ripping, see the article that begins on page 28.*

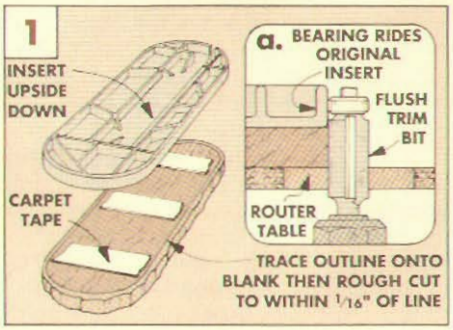


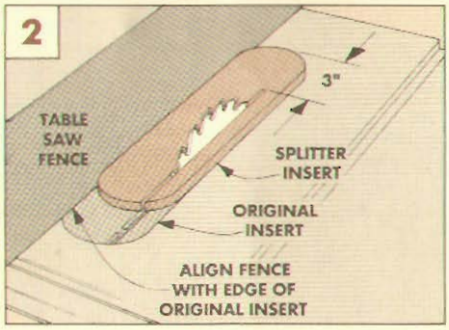


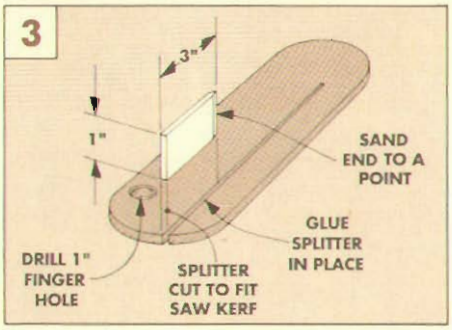


## QUICK TIPS

### FASTENER LUBE

■ To avoid the use of excessive force when driving screws into hardwoods, I use a lubricant. This reduces split workpieces, mangled screw heads, and a lot of unnecessary work. Also, brass screws can be easily broken and twisted off in the workpiece.

Lubricating a large number of screws with paraffin or beeswax can be tedious and time consuming since each screw must be handled individually. Sometimes, the lubricant simply falls off the threads before the screws can be inserted.

This can be easily avoided by spraying the screws with a dry lubricant. (One brand available from woodworking catalogs is Dri-Cote.) Put the screws on a newspaper and spray them for two or three seconds. Then rattle the paper a couple of times and spray again. The screws will be permanently lubricated — and will zip into the wood.

A word of caution: keep this stuff off the floor or it will turn your shop into a skating rink.

*Harold M. Price*
*Helena, Montana*

### SETTING KNIVES

■ In replacing my jointer knives after sharpening, I found that holding the knives in the right position while trying to tighten the set screws was an almost impossible task. My old Sears jointer, like many older model jointers, has no leveling screws and requires that the cutterhead be rotated to gain access to the knives' set screws. Without leveling screws, when I rotate the cutterhead, the knives slip out of position.

To keep the knives in place, I found a sticky putty-like reusable adhesive called Handi-Tack. (Note: This product is available under several brand names, ask at your local *office* supply store.) I put three small beads of the adhesive putty on the bottom edge of a knife and then set it into position in the cutterhead. The Handi-Tack holds the knives while I tighten the set screws.

*Ken Bayer*
*Pittsburgh, Pennsylvania*

### SEND IN YOUR TIPS

If you would like to share a tip or idea, just send it to *Woodsmith*, Tips and Techniques, 2200 Grand Ave., Des Moines, Iowa 50312.

We will pay upon publication $15 to $100 (depending on the published length of the tip). Please include an explanation and a sketch or photo (we'll draw a new one).

# Tall Case Clock

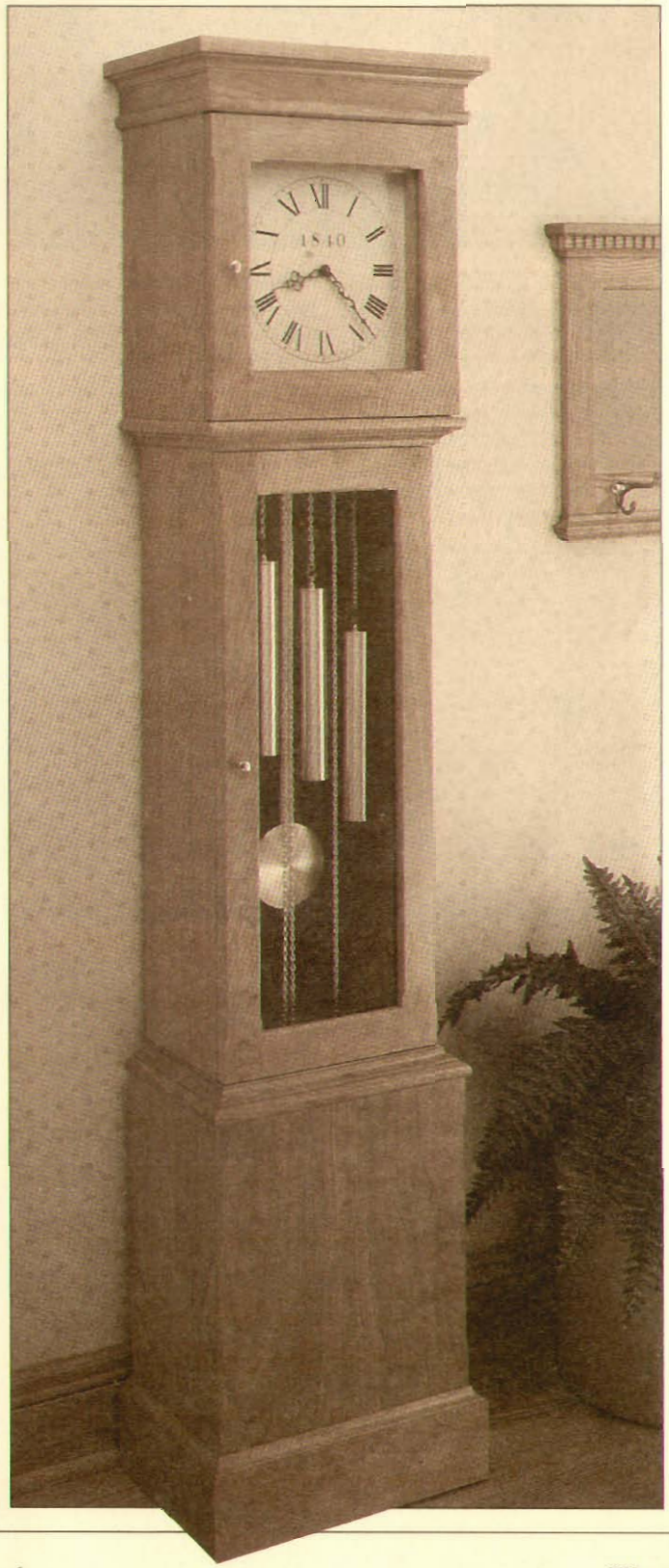

*Timeless design. Solid cherry.*
*Brass clock works.*
*Truly an heirloom project.*

We've made a number of clocks in the *Woodsmith* shop over the years. Most have been designed to hang on a wall or sit on a table. But this Tall Case Clock is more than just a timepiece — it's an impressive piece of furniture. Yet, it's surprisingly easy to build.

**FRAMES.** We were able to keep the construction relatively simple by designing the case with similar components.

Much of the construction involves making frames with molded edges. In fact, there are six frames that divide the three main sections of the case, as well as the crown molding and the kickboard base.

When you look at it this way, the clock is nothing more than some frames with boxes between them. Granted, this is an over-simplification, but it's not far from the truth.

The main difficulty is making the frames precisely. They have to be cut to exact size, they must be perfectly square, and they have to be flat. If you're on target with these little details, the clock is a snap to build.

**EQUIPMENT.** At first glance, you might also expect that you would need a lot of equipment to build a clock like this — especially with all the molding. But we cut all the molding with a router — then stacked it to look like a more complicated piece.

**WOOD.** I chose cherry for this clock. It's all 4/4 stock (3/4"-thick). My bill for the hardwood came to about $120. (This includes extra for cutting around the sapwood.)

**CLOCK KIT.** As for the clock works, we worked with the Mason & Sullivan Company of Massachusetts to put together a special kit of the high-quality brass clock works (made in Germany) and all the hardware you need to build the clock, see Sources, page 31.

**FINISH.** When finishing projects like this (with a lot of molding), I like to use a wipe-on oil finish. This time I chose a tung oil finish (General Finishes Two-Step Sealacell System).

**DOORS.** The clock pictured at left has a glass door to display the brass pendulum and weights. However, you could substitute a solid-wood panel for the glass, see page 32.

**BRACKET.** One last detail. Because this is a tall piece of furniture, it has a high center of gravity and could be easy to tip over. To keep it stable, anchor it to a wall, see drawing below.

**WALL BRACKET**

*Because the clock has a high center of gravity, we recommend adding a bracket to anchor the clock to the wall. This gives the clock stability, and it may give you peace of mind.*

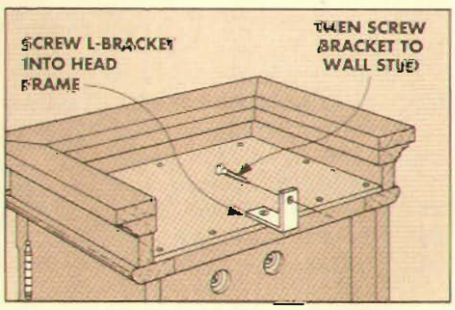

## EXPLODED VIEW

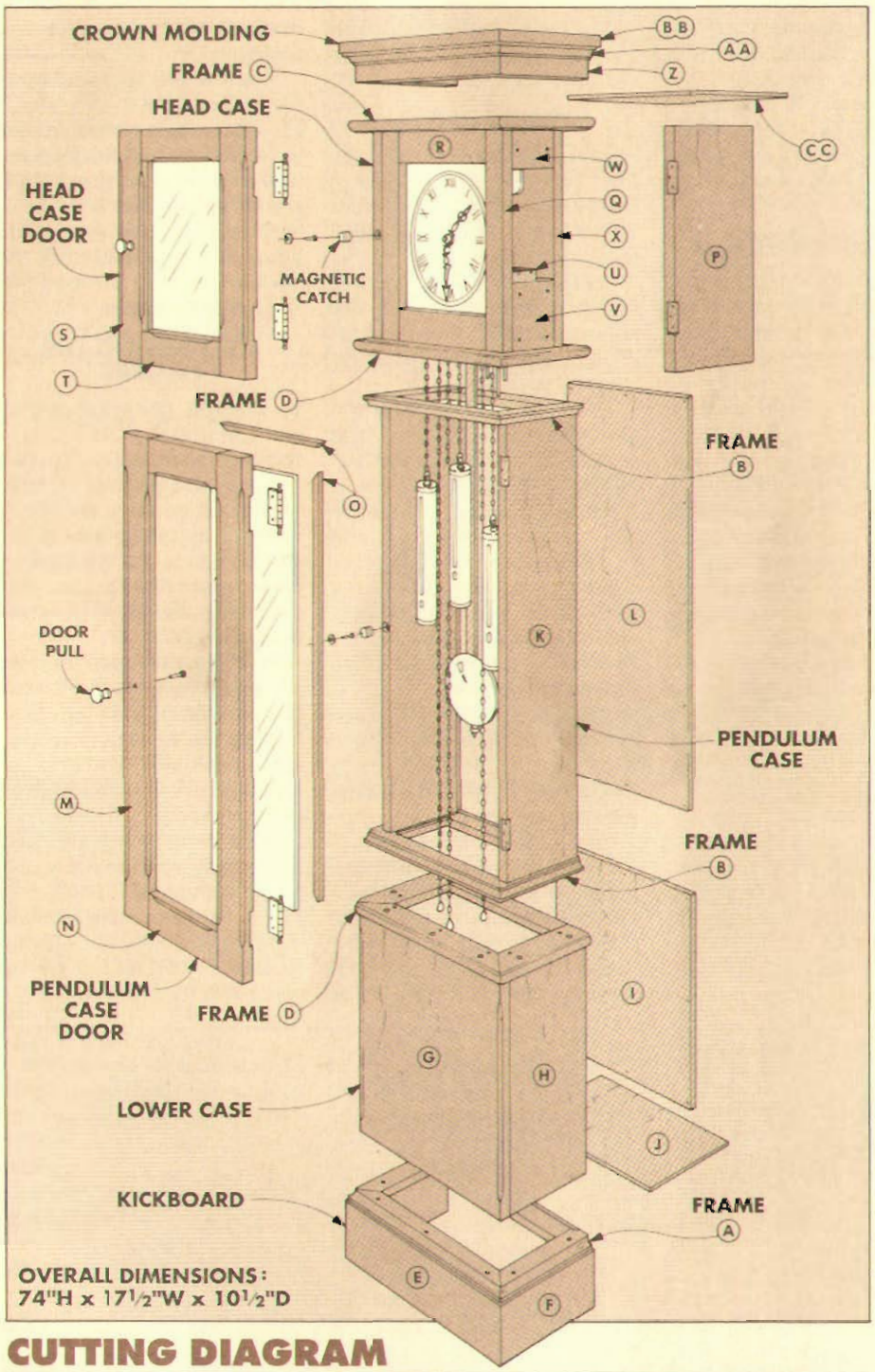


## MATERIALS

**FRAMES (See Page 9 for Details)**

| | | |
|---|---|---|
| A | Kickboard (1) | 9⅞ x 16¼ |
| B | Pendulum Case (2) | 9⅛ x 14¾ |
| C | Head Case – Top (1) | 9¾ x 16 |
| D | Head Case – Bot.(1) | 9⅝ x 15¾ |
| | Lower Case – Top (1) | 9⅝ x 15¾ |

**KICKBOARD**

| | | |
|---|---|---|
| E | Front (1) | ¾ x 4 x 16½ |
| F | Sides (2) | ¾ x 4 x 10 |

**LOWER CASE**

| | | |
|---|---|---|
| G | Front (1) | ¾ x 15 x 16 |
| H | Sides (2) | ¾ x 8¾ x 16 |
| I | Back (1) | *¼ ply - Cut to fit |
| J | Dust Panel (1) | *¼ ply - Cut to fit |

**PENDULUM CASE**

| | | |
|---|---|---|
| K | Sides (2) | ¾ x 7⅝ x 31½ |
| L | Back (1) | *¼ ply - Cut to fit |
| M | Door Stiles (2) | ¾ x 2¼ x 31⅜ |
| N | Door Rails (2) | ¾ x 2¼ x 8¾ |
| O | Window Stop (1) | ¼ x ¼ x 80 Rgh |

**HEAD CASE**

| | | |
|---|---|---|
| P | Sides (2) | ¾ x 8½ x 15⅛ |
| Q | Dial Frame Stiles (2) | ¾ x 1⅝ x 15⅛ |
| R | Dial Frame Rails (2) | ¾ x 2 7/16 x 10¼ |
| S | Door Stiles (2) | ¾ x 2¼ x 15 |
| T | Door Rails (2) | ¾ x 2¼ x 10½ |
| U | Seatboard (1) | ¾ x 2¾ x 13½ |
| V | Seatbd. Support (2) | ¾ x 5½ x 4¾ |
| W | Screw Blocks (2) | ¾ x 3 x 5½ |
| X | Chime Board (1) | ¾ x 13½ x 15⅛ |
| Y | Window Stop (1) | ¼ x ¼ x 50 Rgh |

**CROWN MOLDING**

| | | |
|---|---|---|
| Z | Field Front/Sides (1) | ¾ x 1¼ x 40 Rgh |
| AA | Cove Front/Sides (1) | ¾ x 1¾ x 42 Rgh |
| BB | Rim Front/Sides (1) | ¾ x 2 x 44 Rgh |
| CC | Top Dust Panel (1) | *¼ ply - Cut to fit |
| | Door Panel (Opt.) | ¾ x 9¾ x 28 Rgh |

*Cut from 4 ft. x 4 ft. Sht. of ¼" Plywood

## SUPPLIES

- Clock Kit (see page 31)
- (41) No. 8 x 1½" Fh woodscrews
- (20) No. 8 x 1¼" Fh woodscrews
- (28) No. 6 x ½" Fh woodscrews
- (30) ½" brads
- Single strength window glass
- Tung oil finish

## CUTTING DIAGRAM

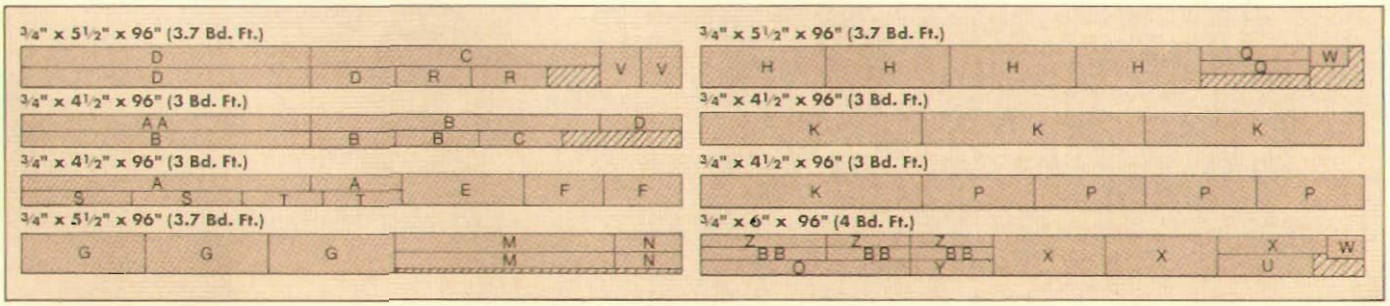

# FRAMES

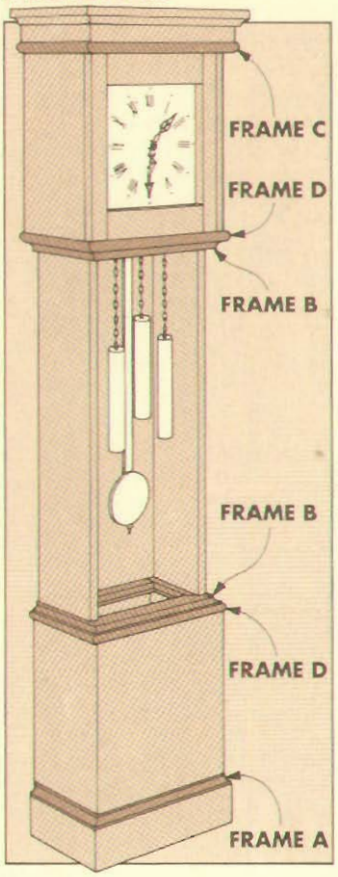


**FRAMES**

A – Kickboard (1)
B – Pendulum Case (2)
C – Head Case – Top (1)
D – Head Case – Bottom (1)
D – Lower Case – Top (1)

What makes this clock an heirloom piece of furniture, and not simply a stack of frames and case sides? The exact fit between all of the parts. To achieve this fit, the solid-wood case sides must be perfectly flat and the frames must be square.

## FRAME DESIGN

Frames for casework are typically joined in two ways. If the frame is mostly decorative, it's joined with miters at all four corners. Structural frames, on the other hand, like the ones you find in a well-built chest of drawers, are usually made with mortise and tenon joints.

For the six main frames on this clock, I borrowed from each of these designs, see Fig. 1. I wanted to hide the end grain on the front corners of the frames, so I used miter joints.

Since the visible edges of the frames have routed profiles on them, and I wanted this profile to extend all the way to the back edges of the frames, I used butt joints on the back corners.

FRAME STRENGTH. Since the frames lay flat and are screwed to the main sections of the case, there's not much force pulling apart the mitered front corners. But the backs of the frames aren't attached to any other part of the case. So here I strengthened the butt joint with a mortise and spline. (You could use a mortise and tenon.)

## FRAME PARTS

All six frames are built the same way. I found it most efficient to build them all at once, rather than one at a time as I needed them for the clock.

I cut the four sections needed for each frame to exact size before assembly. (Note: See the facing page for the measurements of each frame.)

Then, to avoid getting the pieces mixed up, I labeled each section of the frame with an "A," "B," "C," or "D."

FRONTS. The critical dimension on these frames is the length of the **front** piece. Start by cutting 45° miters on the front piece so the long-point to long-point measurement equals the dimensions given in the drawings on the next page.

SIDES. Next cut a miter on one end of each **side** piece. Then trim each of these pieces to length with a square cut across the back end, see Fig. 1.

BACKS. Now cut the **back** of the frame to finished width and length. The length of these back pieces should equal the short-point to short-point distance between the miters on the front pieces. (They will have to be longer if you use a mortise and tenon joint.)

MORTISE AND SPLINES. To join the frame backs to the sides, I cut ¼" mortises on a mortising table. (For more on this joint and how to build a mortising table, see *Woodsmith* No. 67.)

After cutting the mortises to size, cut ¼" splines to fit the mortises, see Fig. 2. I used Masonite for the splines.

## ASSEMBLING THE FRAMES

To keep the frame square, flat and flush across its joints, I clamped the frame, one section at a time, to a piece of plywood with square corners, see Fig. 3.

Begin by gluing one of the side pieces to the front piece. Next, glue the back to this front/side assembly. Then add the last side.

To clamp the frame in place, put one C-clamp on either side of the miter joints, and a bar clamp holding the back in place, see Fig. 3. I also put wax paper under each joint so it wouldn't be glued to the plywood.

ROUT EDGES. When the frame is complete, rout the decorative profile on the front edges, see Fig. 4. (Refer to the procedure shown on the opposite page for routing these profiles.) Do not rout any of the frame *backs*.

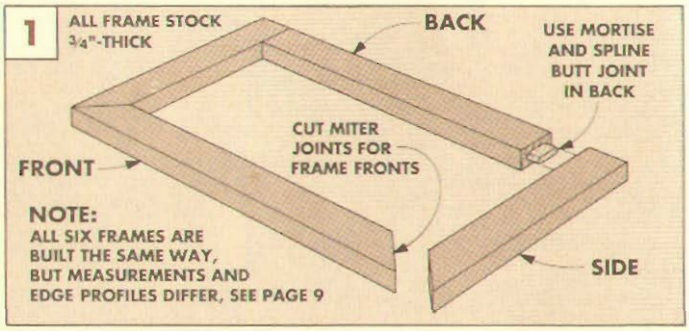


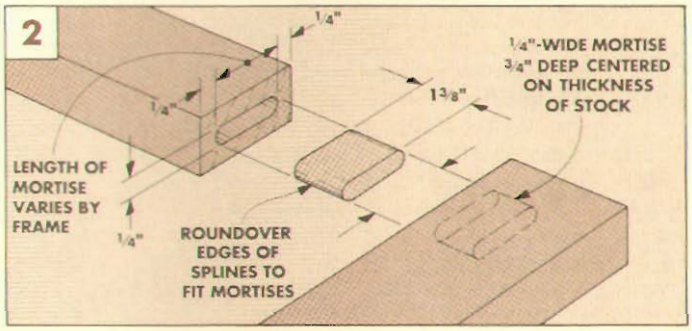


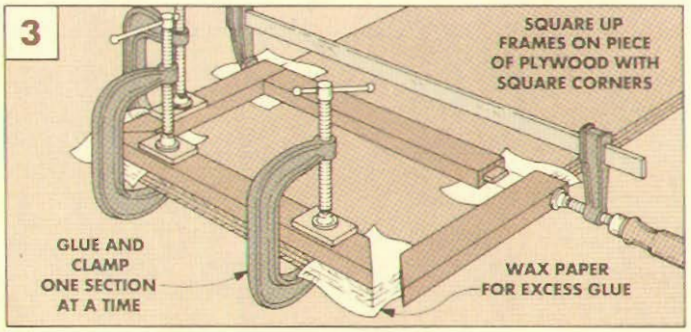


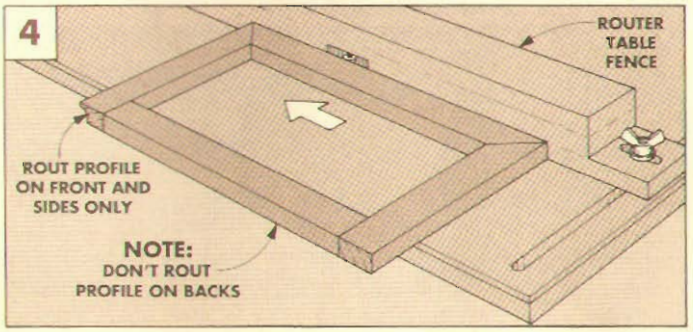

## FRAME A (1)

This frame separates the kickboard from the lower case, see drawing, facing page.

To cut the profile on the front and sides of the frame, rout a ½" cove in several passes until there's a ¼"-thick shoulder along the outside of the frame.

Complete the profile by forming a ⅛"-deep rabbet along the lower outside edge. This should leave a ⅛"-thick shoulder.

Pre-drill the five countersunk shank holes, as shown.

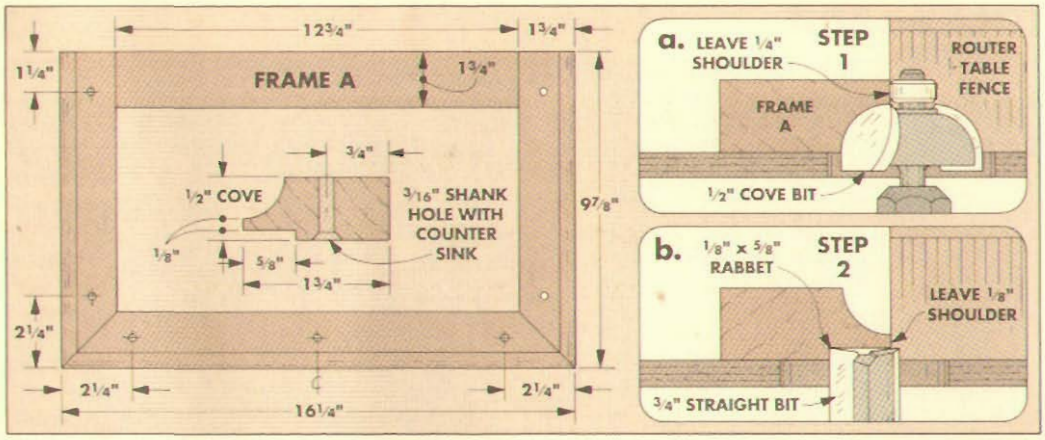


## FRAME B (2)

You will need two of these frames — one for the top of the pendulum case, and one for the bottom of the pendulum case.

Shape the frames by first routing the ½" cove in several passes until there's a ⅛"-thick shoulder on the frame.

Next rout a ⅛" x ⅛" decorative rabbet above the cove. Finally, soften the upper inside edge with a ¼" round-over bit.

Then pre-drill the countersunk shank holes.

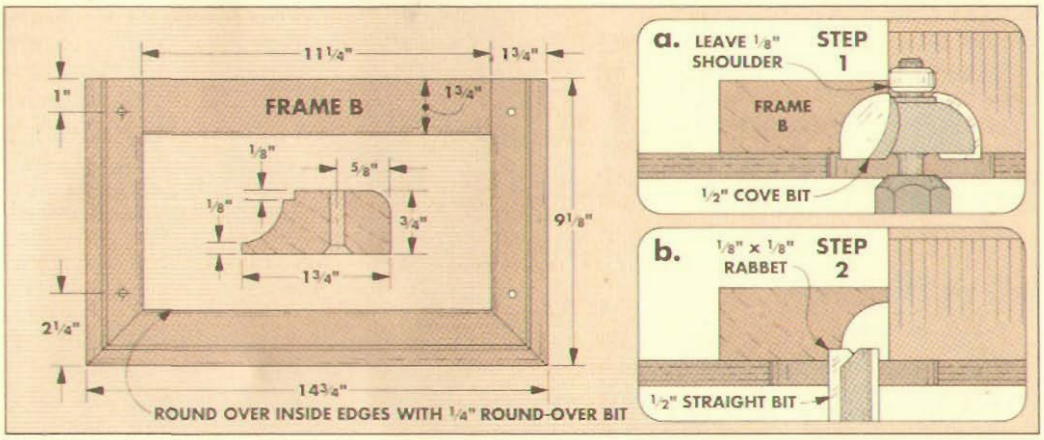


## FRAME C (1)

This frame attaches to the top of the head case.

The "bullnose" profile is routed in two stages. First form a profile around the upper outside edge of the frame using a ½" round-over bit.

Second, complete the bullnose with a ¼" round-over bit on the lower edge. Rout both round-overs to the full depth of cut of each bit.

Finally, pre-drill the countersunk shank holes.

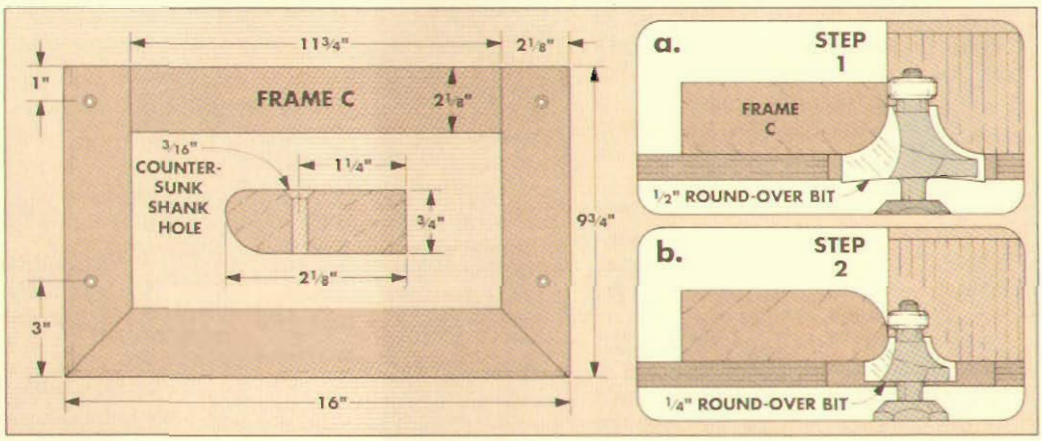


## FRAME D (2)

*Both of these frames are routed* the same way as Frame C above (they're just a different size).

One of these frames is attached to the top of the lower case, and the other is turned over and attached to the bottom of the head case.

Pre-drill the 14 countersunk holes shown on *one frame only*. For the other frame, pre-drill eight holes only on the side pieces — omit the six shank holes on the front piece.

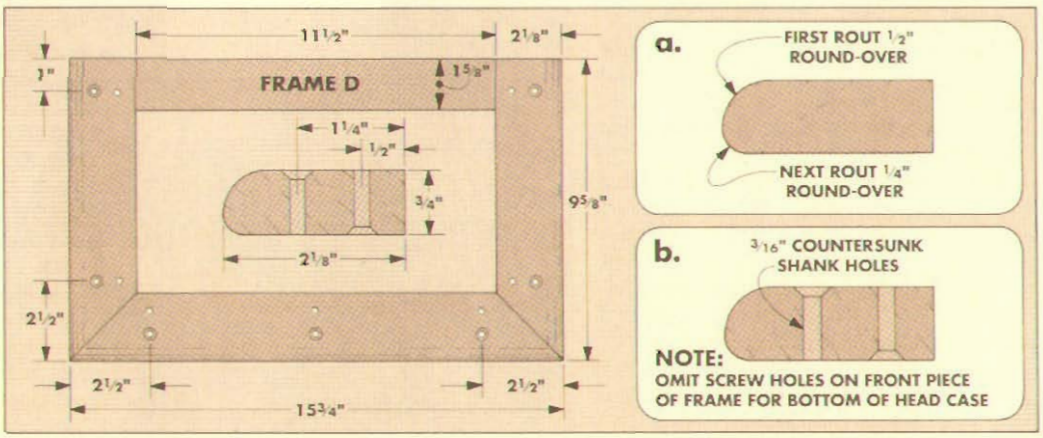

## KICKBOARD

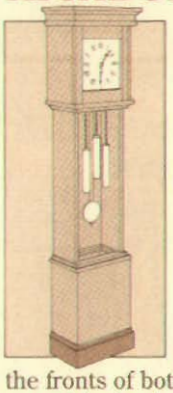

After making all six frames I began work on the kickboard. The kickboard consists of a **front (E)** and two **sides (F)**. Start by ripping all three pieces to a uniform width of 4", see Fig. 5.

**MITERS.** Now, miter both ends of the kickboard front (E) so it's ¼" longer than the front of Frame A (16½" from long-point to long-point). Then miter the fronts of both kickboard sides (F), and cut off the backs so they're ⅛" longer than the sides of Frame A (10"), see Fig. 7.

**KERF AND SPLINE.** Next, cut a kerf along the mitered edges of each piece, and cut splines to fit the kerfs, see Fig. 6. Glue the splines in place and clamp the unit square.

**ATTACH FRAME.** To complete the kickboard, center Frame A on top of the kickboard and glue it in place, see Fig. 7.

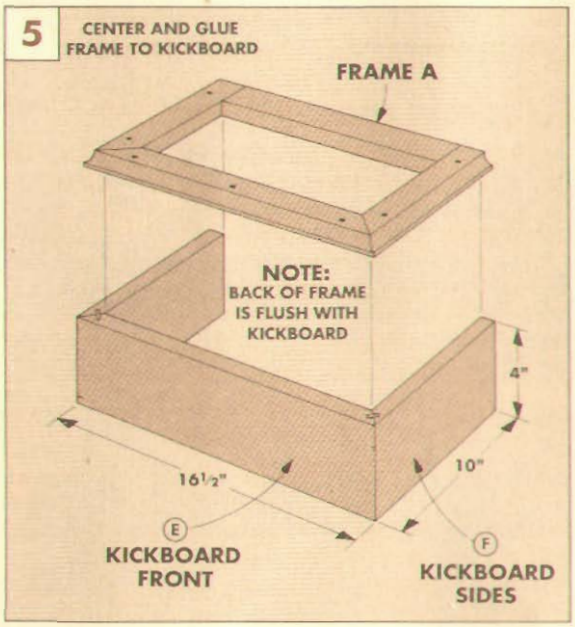


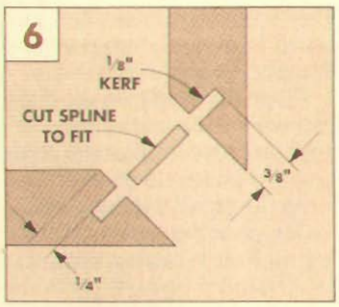


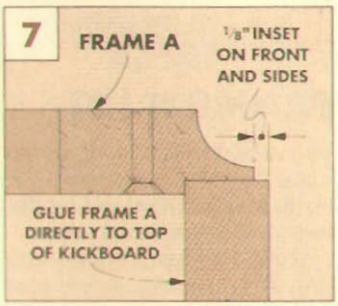


## LOWER CASE

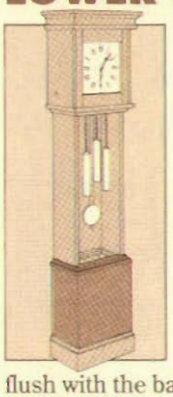

Now begin work on the lower case. Start by edge-gluing boards for the **front (G)** and **side panels (H)**, see Fig. 8. These panels will stand on the kickboard frame. Cut all the panels to final length (16"), then cut the front panel to final width (15") so it's inset ⅛" from the coved edge on Frame A, see Fig. 10.

The side panels attach flush with the back of the kickboard frame. Before cutting them to width, cut a tongue and groove joint along the front edges of the front and side panels, see Fig. 9.

**ASSEMBLE CASE.** Now the side panels (H) can be cut to final width (8¾"), see Fig. 8. Then spread glue inside each groove, and slide the tongued side panels into the grooved front panel. Clamp the case with pipe clamps until the glue dries.

**CHAMFER EDGES.** After the glue dries, rout a decorative 3/16" chamfer along the outside edges of the front piece, see Fig. 11. Stop the chamfers 2" from the top and bottom of the case.

**ATTACH UPPER FRAME.** Now screw a bullnose "D" frame (the one with 14 shank holes) onto the top of the case assembly, centering the frame across the sides. This should result in a ⅜" overhang around the front and sides, see Fig. 10. The frame should be flush at the back edge of the lower case.

**INSTALL ONTO KICKBOARD.** Finally, screw this entire sub-assembly to the top of Frame A on the kickboard, see Fig. 10.

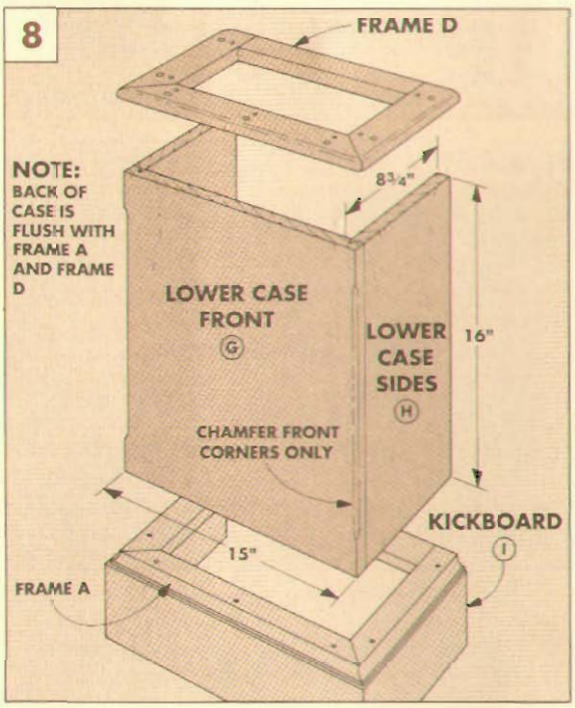


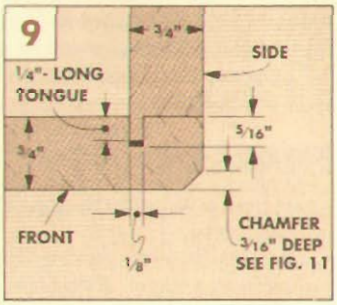


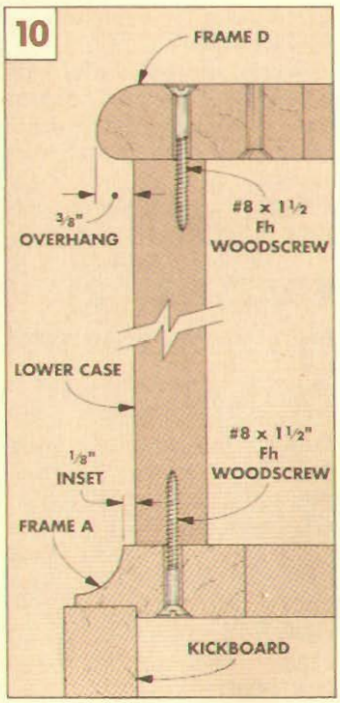


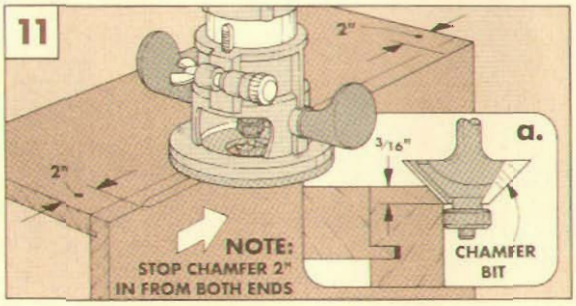

## PENDULUM CASE

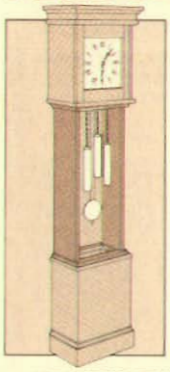

The pendulum case consists of two sides (K) held in place between a pair of "B" frames, see Fig. 12.

SIDES. To make the **case sides (K)** start by edge-gluing blanks to a rough width of 8" and length of 32". Then trim each to a final width 1½" less than the depth of Frame B (7⅝" in my case), and 31½" long, see Fig. 12.

ALIGNING FRAME TO CASE SIDE. With the side panels cut to size, the case can be assembled. To do this, stand one of the "B" frames on edge with its back (unshaped) section down. Then stand one of the case sides on edge. (This ensures that the back edges of both pieces are flush.) Now position the side piece ⅛" in from the shoulder of the frame, see Fig. 13.

PILOT HOLES. Using the pre-drilled shank holes in the frames as guides, drill pilot holes for both screws. Now screw the frame to the side piece with two No. 8 x 1½" Fh woodscrews. Then attach the other side piece.

The second "B" frame attaches at the other end of the case assembly in the same manner. This frame mirrors the first frame — the cove-molded edges of both frames face toward each other and into the case opening, see Fig. 13.

INSTALLING ONTO LOWER CASE. Now the pendulum case can be screwed in place onto the lower case with No. 8 x 1½" Fh woodscrews, see Fig. 14.

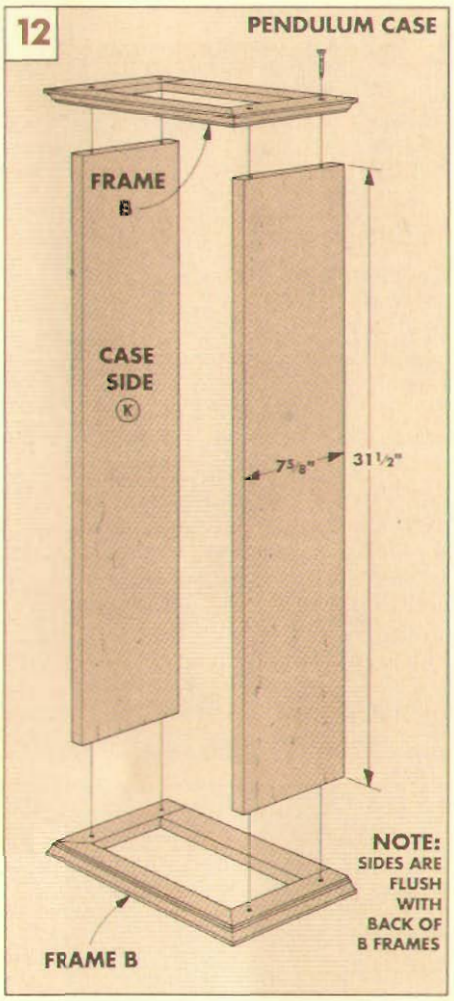


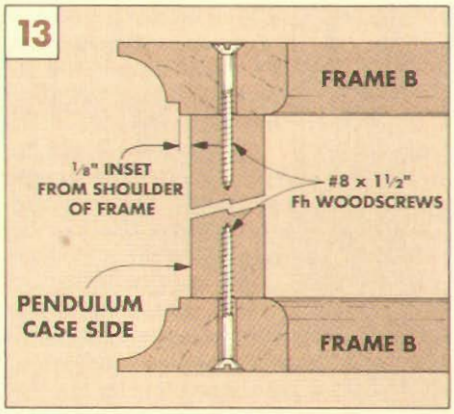


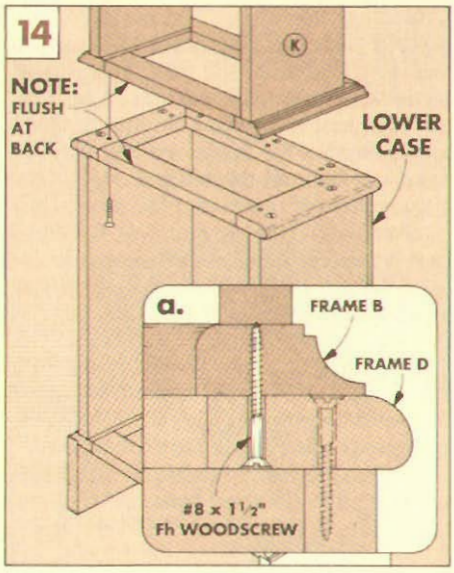


## PLYWOOD BACKS

Once the pendulum case has been attached to the lower case, ¼" plywood backs can be screwed into rabbets routed around the back edges of both cases.

ROUT RABBETS. First, lay the entire assembly face down across a pair of sawhorses. Then rout a ¼"-deep and ⅜"-wide rabbet around all four inside edges of both case openings, see Fig. 15. I did this with a ⅜" rabbetting bit in the router. (For more on routing on the edge of a workpiece, see Shop Notes, page 16.)

With a chisel and mallet, square up the rounded corners of each of the rabbets.

CUT PANELS. Now measure the size of each of these openings and cut a **lower case back (I)** and a **pendulum case back (L)** to fit from ¼" plywood.

Also measure and cut a **dust panel (J)** to lay flat in the bottom of the kickboard assembly, see Fig. 15.

ATTACH PANELS. Install the dust panel (with ½" brads), and both case backs (with No. 6 x ½" Fh woodscrews), see Fig. 16.

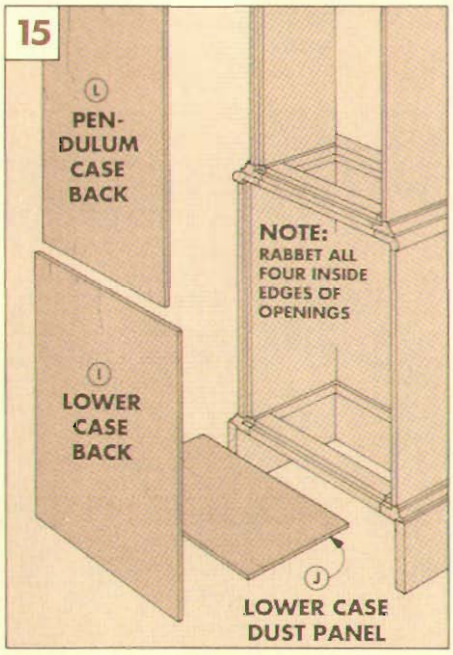


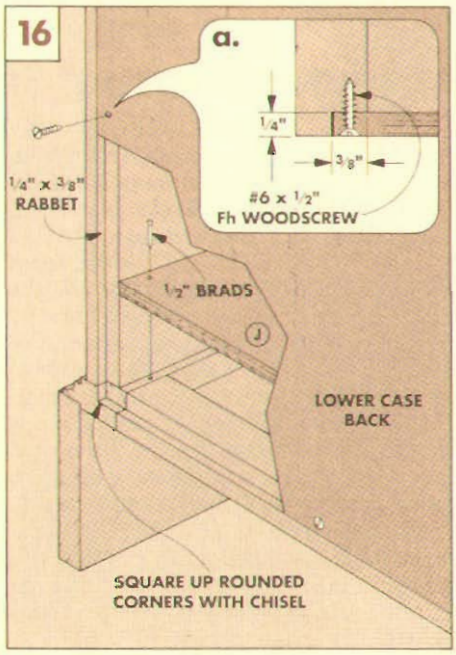

## HEAD CASE

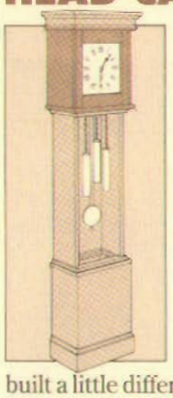

The head case is made up of two sides (P) separated by a dial frame, and attached to two bullnose frames, see Fig. 17.

**HEAD SIDES.** Begin by edge-gluing two **head sides (P)**, and trimming each to 1⅛" less than the depth of Frame D (8½" wide), and 15⅛" long.

**DIAL FRAME.** The frame that holds the clock face is built a little differently than the case frames. It has mortise and spline joints (or mortise and tenon joints) at each corner.

To make this frame, first cut two **stiles (Q)** 1⅝" wide and 15⅛" long. Then cut two **rails (R)** 2 7/16" wide and 10¼" long. (Note: If you're using mortise and tenon joints, cut the rails longer to allow for the tenons.) Then assemble the frame, see Fig. 17a.

Now, soften the front inside edge of the frame with a ⅛" round-over bit, see Fig. 17.

**ASSEMBLY.** Start assembling the head case by gluing the dial frame between the two head sides (P). Clamp the U-shaped assembly so the pieces are flush at the top, bottom, and front.

After the glue dries, screw the bullnose frames (C and D) to the top and bottom of this sub-assembly, see Fig. 17b. (Note: The bullnose profiles face the same direction.)

Position the frames so they're flush with the head sides (P) at the back, and centered from side to side. Then drill pilot holes through the shank holes in the frames, and screw the frames to the side pieces.

**SCREW TO PENDULUM CASE.** Finally, screw the head case to the top of the pendulum case, see Fig. 18.

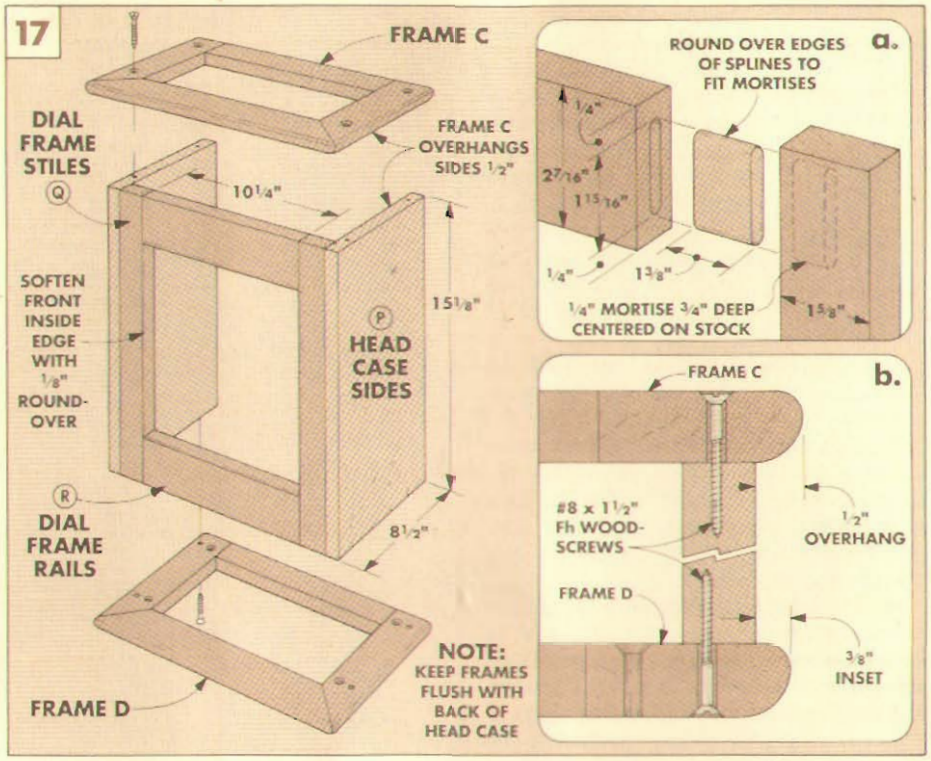


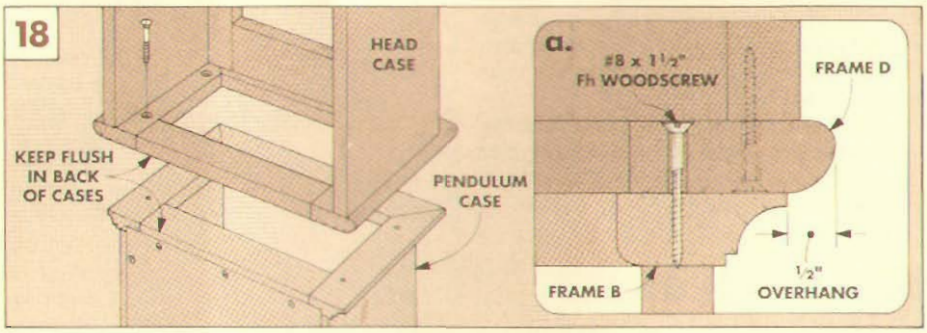


## CROWN MOLDING

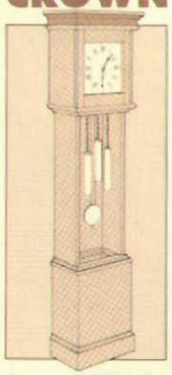

The crown molding assembly is made up of three U-shaped frames. A **field frame (Z)** stands on edge, a **cove frame (AA)** is routed and lays flat, and a **rim frame (BB)** lays flat on top of this, see Fig. 19.

Make these frames by first cutting three strips of ¾" stock to a rough length and finished width for each frame. Then, on the cove frame (AA) pieces, rout the same cove and rabbet profile as on Frame B, refer to page 9.

Now miter the front section of each frame to final length, see Fig. 19. Then miter each side piece, and cut to length. Assemble the frames by gluing the front and then the sides onto the frame below it, see Fig. 19a.

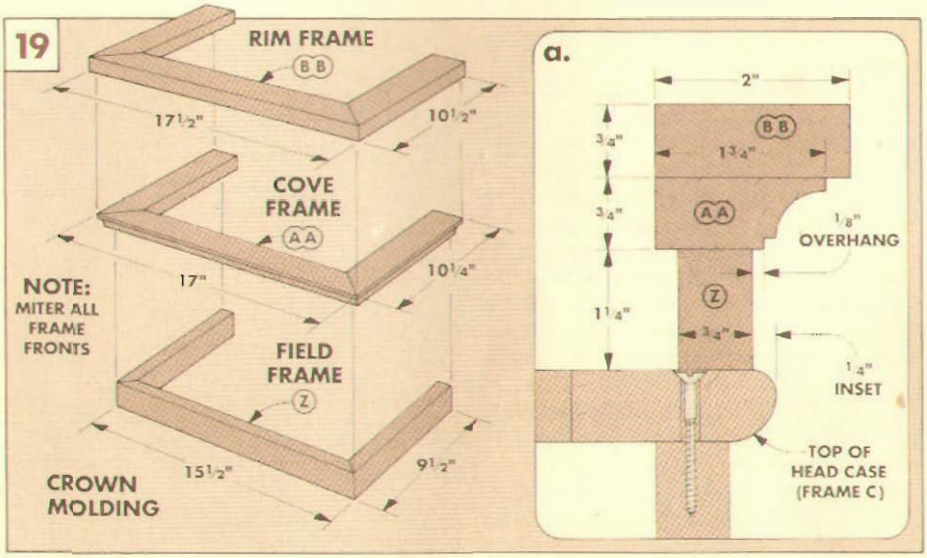

## DOORS

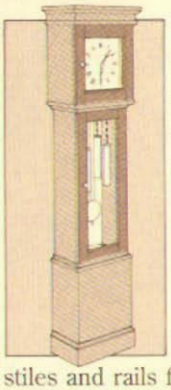

The clock has two doors—a head case door that allows access to the clock hands, and a pendulum case door that allows access to the weights. The frames for both doors are made using mortise and spline joints, and both frames have a rabbet along the inside edge to accept a glass (or wood) panel.

**STILES AND RAILS.** The stiles and rails for both doors are all 2¼" wide. To determine the length of the door frame stiles, subtract ⅛" from the height of the door openings. (This allows 1/16" clearance above and below the finished doors.) Now cut two **pendulum case door stiles (M)** and two **head case door stiles (Q)** to length, see Fig. 20.

To determine the length of the **pendulum case door rails (N)** and **head case door rails (R)**, subtract 4½" from the width of the pendulum case and the head case, see Fig. 20.

**SPLINES AND MORTISES.** To assemble the frames, first cut mortises on all the mating pieces. (I cut all the mortises on a mortising table.) Then make eight splines for the two frames, see Fig. 20a. Now clamp the frames flat and square with the splines in place.

**INSIDE RABBETS.** With the door frames assembled, cut the rabbets that receive the glass (or solid wood) panels. I used a ⅜" rabbeting bit in the router, see Fig. 20b. Cut these rabbets ⅜" deep. Then use a chisel and mallet to square up the round corners.

**STOPPED CHAMFERS.** The faces of both frames have a stopped chamfer routed along the inside edges of the rails, and both edges of the stiles, see Fig. 20. With a pencil, mark the stopping points for the inside chamfers ⅝" from the corners, see Fig. 20b. Mark the stopping points for the outside chamfers 2" from the ends of the stiles, see Fig. 20b.

**PANEL STOPS.** After routing the chamfers, cut a quarter-round **head case window stop (Y)** and **pendulum case window stop (O)** from ¼"-thick stock, see Fig. 21. Note: Fig. 21 also shows an optional wood panel (see a photo of this option on page 32).

The glass panels should be cut to fit the dimensions of the door openings (less ⅛"). Install them with the panel stops mitered at their ends and nailed in place with ½" brads.

**HANGING THE DOORS.** Each door hangs with two 2" brass butt hinges. The hinges are positioned 2" from the top and bottom of each door, and mortised into both the case sides and the frame stiles, see Fig. 22.

**PULLS AND CATCHES.** Now drill holes in both frames for door pulls (see Fig. 20 for locations). Then drill holes for two door catches. Finally, install the pulls and catches.

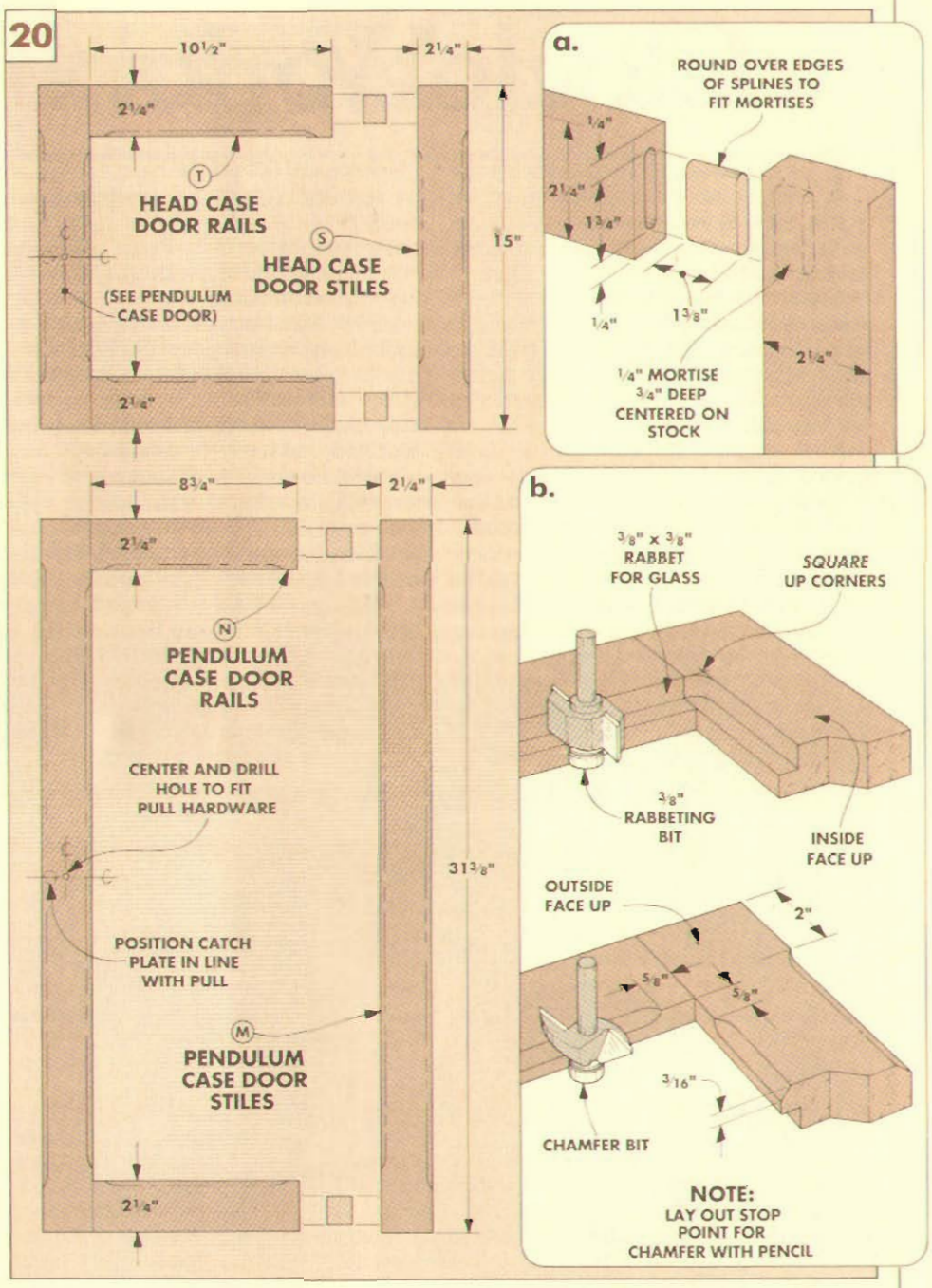


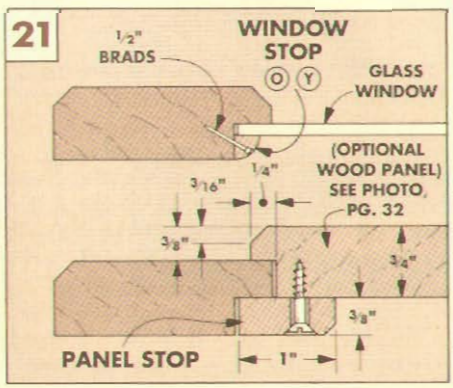


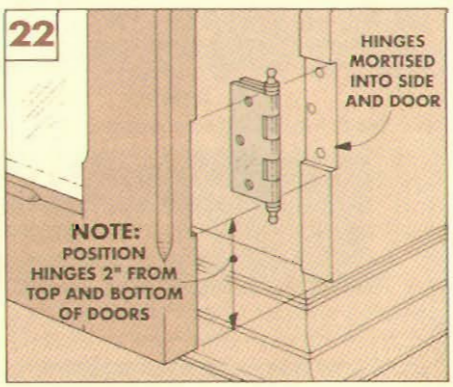

# Clock Works

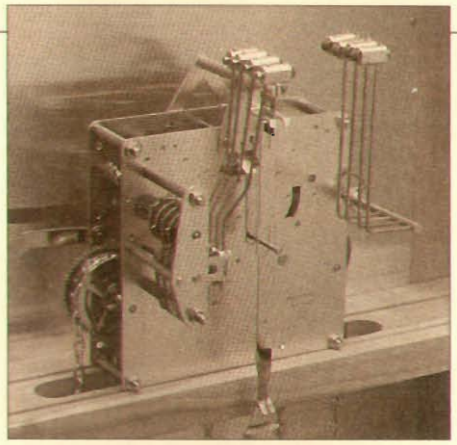

The clock works consists of two major components — the movement and the chime rods. Before you can install these, center and screw the clock dial face on the back of the dial frame.

**SEATBOARD.** The clock movement sits on a grooved **seatboard (U)** that straddles a pair of supports (V), see Fig. 1. To make the seatboard, rip a piece of ¾" stock to a width of 2¾", see Fig. 1a. Then cut it to length to fit between the head case sides.

Now cut two ⅛"-wide and ⅛"-deep grooves (kerfs) along the length of the seatboard to accept the movement, see Fig. 1a.

The brass chains that support the weights hang through a slot centered between these grooves. To form the slot, first drill a pair of ¾" holes to define the ends of the slot, see Fig. 1a. Complete the slot by connecting these end holes with two sabre saw cuts.

To mount the seatboard into the case, drill 3/16" countersunk holes on each end of the seatboard, see Fig. 1a. Also, drill a ⅜" hole near one end for a chime silencing wire.

**SEATBOARD SUPPORTS.** Next, to support the seatboard (U), cut two **seatboard supports (V)** 5½" wide and 4¾" long. Then screw the supports to the inside of the head case sides, and the seatboard (U) across the top of the supports, see Fig. 1.

**SCREW BLOCKS.** In order to mount the chime board to the back of the head case, I attached **screw blocks (W)** to the top inside of the case, see Fig. 1. Cut these blocks 3" wide and 5½" long (to match the seatboard supports), and screw them in place.

**CHIME BOARD.** The chimes are screwed to a **chime board (X)**, which also acts as a back panel for the head case. To make this piece, edge-glue a panel from ¾" stock and cut it to fit in the back of the case, see Fig. 1.

Next, bore 3/16" holes through the chime board to mount the chime block, see Fig. 1. Counterbore the holes on the back to accept the large washers that come with the chimes, see Fig. 2. Also drill countersunk shank holes to mount the chime board to the screw blocks and seatboard supports.

**INSTALL WORKS.** Now, set the clock works on the grooved seatboard (U). The handshaft should be centered in the dial hole. If it isn't, remove and re-cut the supports (V).

To add the chimes, first screw the chime block onto the chime board (X). Then screw the chime board to the screw blocks (W) and seatboard supports (V), see Fig. 1.

**DUST PANEL.** After you've fine tuned the movement and chimes, top off the head case with a **dust panel (CC)**, see Fig. 1. Cut this to fit within the crown molding and screw (don't glue) it in place — you may need to remove it to adjust the works. Finally, add a wall bracket as shown on page 6.

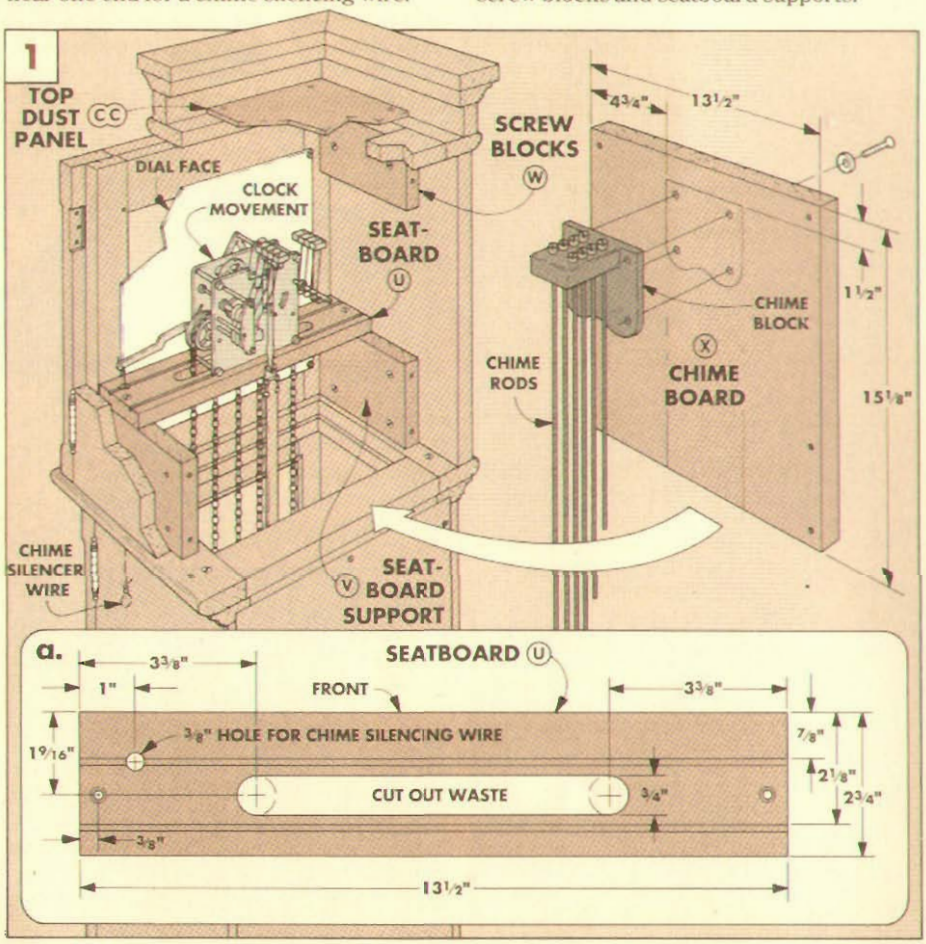


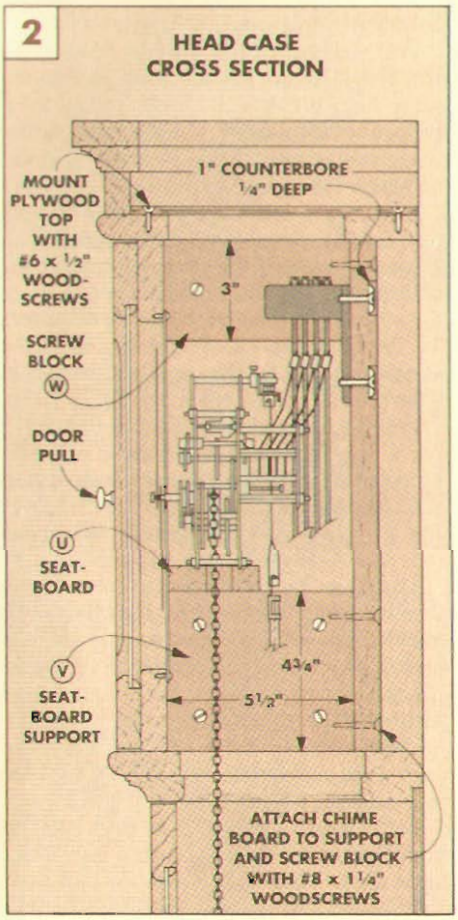

# Talking Shop

## PLANING THIN STOCK

■ *In* Woodsmith *No. 63, you mentioned using a Ryobi AP-10 planer to reduce stock to 1/8" thickness. My owner's manual states that you shouldn't plane thinner than 1/2". What's correct?*

*Allan G. Johnson*
*New Fairfield, Conneticut*

To help answer your question, I called Ryobi to find out why they list a minimum 1/2" thickness. Ryobi explained that it has to do with potential safety problems, not mechanical problems.

Since wood grain can switch directions randomly, it's possible for large chunks of stock to tear loose. And the thinner a piece gets, the less there is to hold the chunks in place. I've seen pieces blow apart in a planer.

**SOLUTIONS.** So Ryobi's solution is to recommend a 1/2" minimum thickness. However, I've planed stock to less than 1/2" thick on occasion. When doing this I make sure the knives on the planer are sharp. If the knives are dull, they "beat" against the stock rather than slice through it.

Also, I examine each piece of wood and insert it in the planer so the majority of the planing will be done *with* the grain. And, even if I'm planing straight grain, I never stand directly behind the planer or look into it while it's operating.

**AUXILIARY PLATFORM.** I've planed stock very thin by using an auxiliary platform. This platform is placed on top of the bed and allows me to plane stock to as thin as 1/32", see Fig. 2. (Note: You can't use a platform like this with a planer that has feed rollers on the bottom.)

To make the platform, cut a piece of 3/4" hardwood plywood 1/4" narrower and at least 3" longer than the bed of your planer. For the Ryobi AP-10, I cut this platform 9 3/4" wide and 16" long, see Fig. 1.

Next, glue on two side guides made from 1/4" Masonite to keep the stock aligned directly under the cutterhead.

Finally, to keep the platform from being pulled through the planer, glue a 1" cleat cut from 3/4" plywood along the the bottom front edge, see Fig. 1.

To use the platform, hang the cleat over the infeed side of the planer bed, see Fig. 2a. Then, making very shallow cuts, feed the stock through as normal.

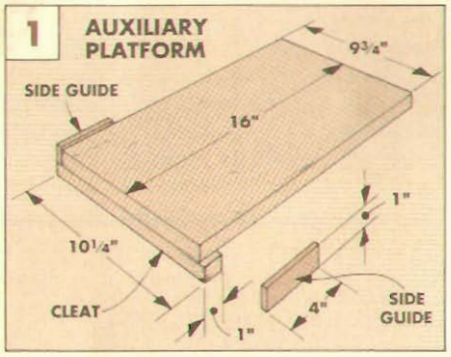


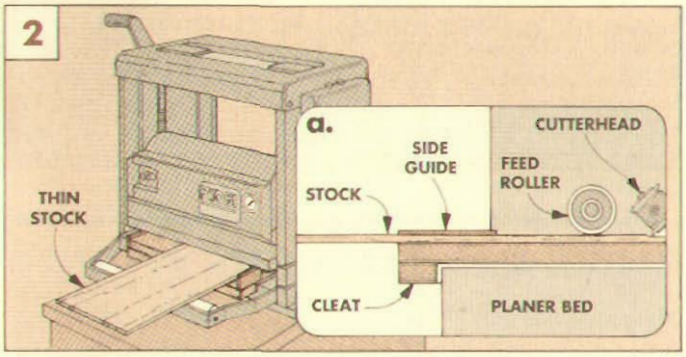


## USING A SABRE SAW

■ *I don't have a band saw so I substitute a sabre saw. Sometimes it gives me a smooth cut, but other times I get a ragged, wavy cut. Am I doing something wrong? Or is it my sabre saw?*

*George Martin*
*East Dubuque, Illinois*

If you're using a sharp blade that's designed for the task, you're probably not doing anything wrong. Except maybe asking too much from the tool.

Few sabre saws will follow a straight line very well (especially a long line). The cut made in thick stock is often beveled. And you'll have a hard time getting a sabre saw to follow a long curve with finished-quality results. These shortcomings center around the way a sabre saw is designed to cut, rather than the way you're using it.

**SAWING VS. SLICING.** The sabre saw makes up-and-down sawing cuts as opposed to the slicing cuts made by a band saw's continuous loop blade. This means only a few of the sabre saw teeth ever touch the wood, while a band saw blade has several hundred teeth that cut through the stock.

**TOOTH SET.** Also, most sabre saw blades have little or no "set." (That is, the toothed edge of the blade doesn't produce a wider kerf than the rest of the blade.) But band saw blades do have some set. This allows them to make curved cuts without binding, which heats up the blade.

**HEAT BUILD-UP.** I think that's the main problem with sabre saws — heat build-up on the blade. The up-and-down action on the blade produces a lot of friction. The blade never gets a chance to cool down as it cuts.

When you first start cutting, the blade will cut straight. But before long it heats up and wanders off course (especially in thick wood or wild grain). Heat causes the blade to bend.

A sabre saw blade cuts best when it's allowed to find its own path of least resistance through the wood grain. If you can't pivot the back end of the saw slightly to compensate for changes in the direction the blade is traveling, the blade heats up and starts bending. I've especially noticed this bending when running a sabre saw along a fixed position (such as against a straightedge) or around a fixed point (as with a trammel point attachment).

**SOLUTIONS.** The best practice is to stay outside your intended line of cut. (You can always sand up to it later.) Also, to prevent wandering, use the widest blade you can and still cut the radius you need.

One more thing. A blade with a large number of teeth per inch (above 10) produces a smooth cut. But sawdust can build up in all those teeth and cause friction, especially in thick stock. So when using a sabre saw, you may have to sacrifice a smooth cut by using a coarser blade that runs cooler — and straighter.

# Shop Notes

## ROUTING ON AN EDGE

■ When I began routing the rabbets for the back panels on the Tall Case Clock, I had trouble keeping the router level on the narrow edge of the case.

If you try to balance the router on the narrow edge, it will probably tip one way or the other and dig into the wood, see Fig. 1.

**CLAMP ON SUPPORT.** There are a couple of ways to solve this problem. If the box or case is constructed in such a way that clamps will reach around it, I clamp on a 2x4 block flush with the edge to be routed, see Fig. 2. This provides an extra 1½" of support for the router base.

**AUXILIARY BASE.** The second method is to add an auxiliary base to the router, see Fig. 3. The base serves as a bridge across the case to the opposite side. I make this auxiliary base from a piece of ¼" Masonite.

After drilling a hole in the platform for the bit to come through, I use double-sided carpet tape to stick the auxiliary platform to the plastic base on my router. (Or, you can remove your existing base and screw the new platform directly to your router.) Then, rout as usual with the new base straddling over both edges of the case.

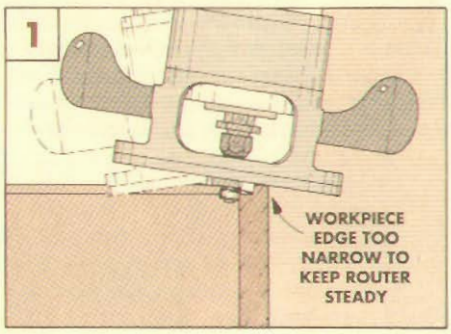


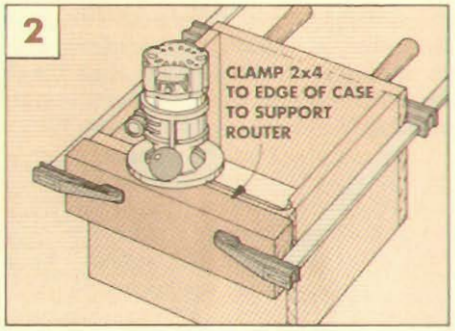


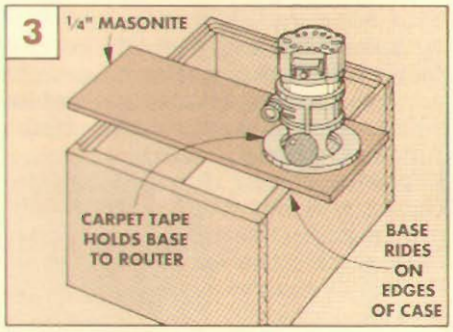


## MITER AND SPLINE JOINT

■ On the kickboard of the Tall Case Clock I used a miter and spline joint. (Note: A spline is a thin piece of wood that runs *across* the joint). The miter joint hides the end grain. But I add a spline for a couple of reasons.

**ADVANTAGES OF A SPLINE.** First, a spline strengthens the joint by providing more glue surface. A miter joint by itself is only an end-grain to end-grain joint which is structurally very weak.

Second, miters tend to slide out of alignment as you clamp the joint during glue-up. A spline helps keep the pieces aligned.

**CUTTING THE KERFS.** The spline fits into kerfs cut in both sides of the joint. After cutting the miters, lower the blade, but keep it tilted to 45°. Then slide over the rip fence to act as a stop, see Fig. 1. (Note: Since you're not cutting completely through the piece, it's okay to use both the miter gauge and rip fence at the same time.)

The position of the rip fence (stop) will determine the location of the kerf, see Fig. 1a. I prefer to offset the kerf toward the heel rather than the point of the miter, see Fig. 2.

With the spline near the heel, the tip isn't as likely to crack off if the joint is stressed. And by positioning it near the heel, you can insert a longer spline to provide more glue surface.

**SPLINE.** After cutting the kerfs, cut splines to fit in the kerfs. If the spline will be hidden in the finished project, I use ⅛" Masonite for splines.

If the spline will be exposed, you can use the same wood as the other pieces. For maximum strength, cut the spline so the grain runs perpendicular to the the joint line, see Fig. 3.

Also, to ensure that the spline won't prevent the miter from closing completely, I cut the spline a hair shorter than the total depth of both kerfs.

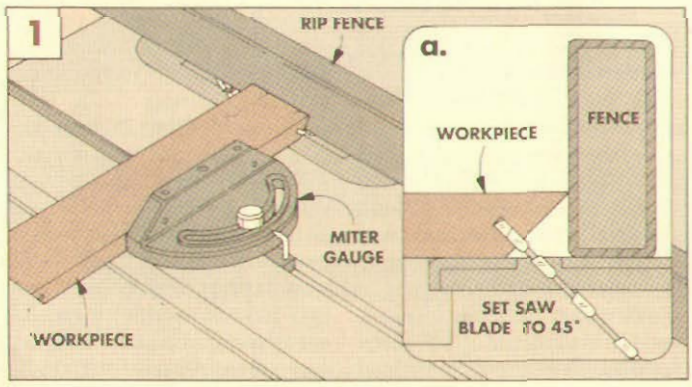


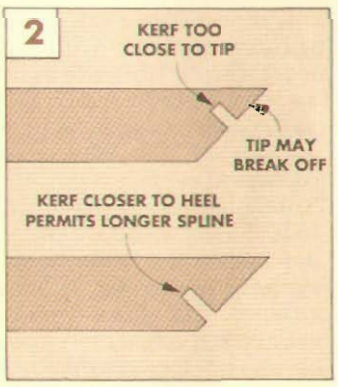


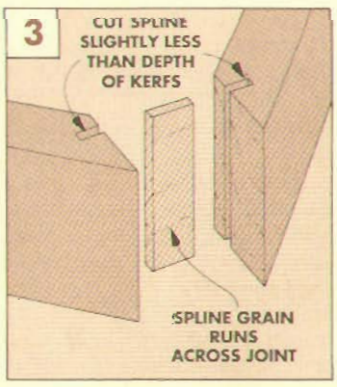

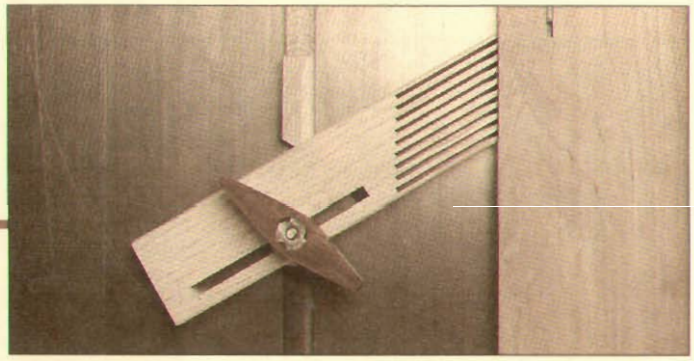

# FEATHERBOARD

■ To get accurate results when using a fence on a table saw, I like to use a featherboard.

A featherboard is designed to apply constant pressure to the side of the workpiece. This pressure is created by cutting several long notches in one end of the featherboard. The stock that remains, the finger-like barbs, act like springs, putting pressure against the stock.

**EXPANDABLE RUNNER.** The biggest problem with a featherboard is finding a way to hold it in place, especially on a table saw where clamping is difficult

To solve this problem, I made a runner that expands to fit tight in the miter gauge slot of my table saw, refer to Fig. 4a. But, this only keeps the runner in place.

To keep the featherboard from turning, I glued a stop block to the top of the runner. By mitering the end of the stop 30° each way, the featherboard can be used in two directions.

**CUT THE BLANK.** To make the featherboard, I started with a ¾"-thick blank, about 14" long. Next, rip it to a finished width of 2⅜" and cut a 30° miter on one end, see Fig. 1. The featherboard will be trimmed to a finished length of 10" later.

**BARBS.** The next step is to cut the barbs. To keep each of the barbs a uniform length, I marked a stop line parallel to and 2¾" from the angled end, see Fig. 1. Each of the barbs is ⅛" wide and can be cut with a hand saw, a band saw, or a table saw.

Note: If you use a table saw, raise the blade to full height so the ends of the notches will be as vertical as possible. This creates room for an adjustment slot that's added later.

Safety Note: When using the table saw to cut the notches, turn off the saw and wait for the blade to stop, then pull the stock out.

Finally, cut the featherboard to its finished length of 10".

**ADJUSTMENT SLOT.** To allow the featherboard to be used with varying widths of stock, cut an adjusting slot near the short edge.

To make the slot, cut a 5/16"-wide groove that extends 5½" from the square end of the featherboard, see Fig. 1. Then for added strength, cut a small filler block and glue it in place.

**RUNNER.** With the featherboard complete, the next step is to cut a 12"-long runner to fit in the miter slot of your table saw, see Fig. 1. (On my table saw the miter slot measures ¾" x ⅜".)

Once the runner is cut, the hole for the bolt and the expansion slot are made in one end, see Fig. 2. Then cut the runner to a finished length of 5", see Fig. 1.

**STOP BLOCK.** Next, to make the stop, I used the waste from cutting the runner to length, see Fig. 3. Cut two 30° angles on one end, trim the stop to length, and glue it to the top of the runner.

Finally, assemble the featherboard and the runner, see Fig. 4.

As the wing nut is tightened the bolt head forces the sides of the guide bar against the sides of the miter gauge slot. In effect, it's wedged tightly in place.

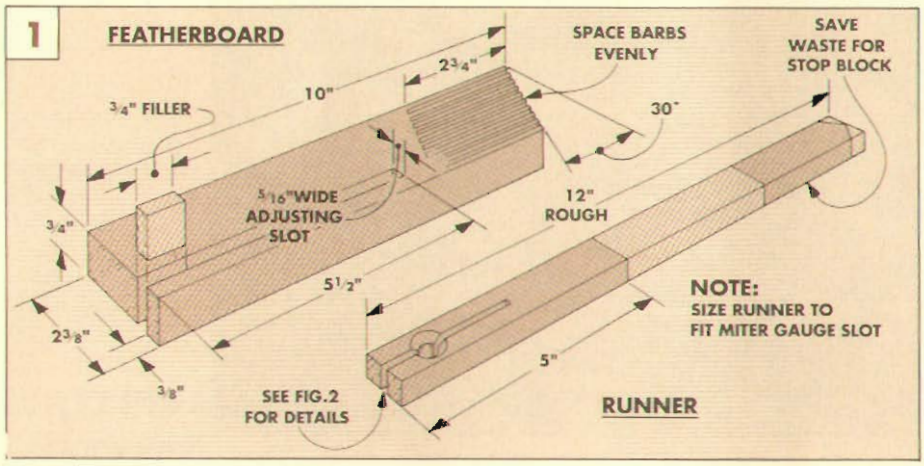


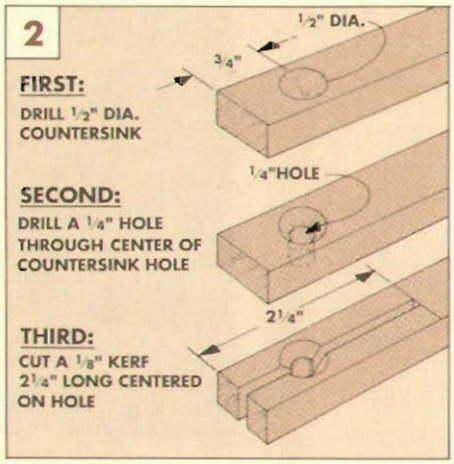


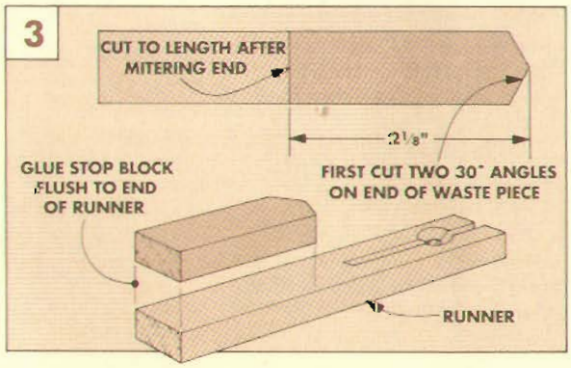


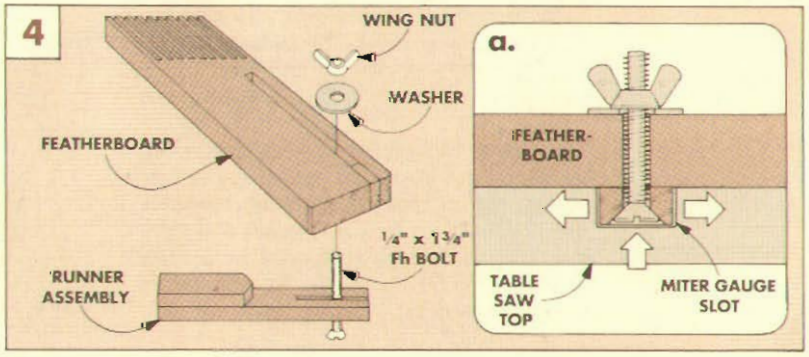

# Roller Stand

*When ripping long boards, a roller stand comes in handy. But how can you build one inexpensively? Use PVC pipe for the rollers. Then add some features to make the stand a joy to use.*

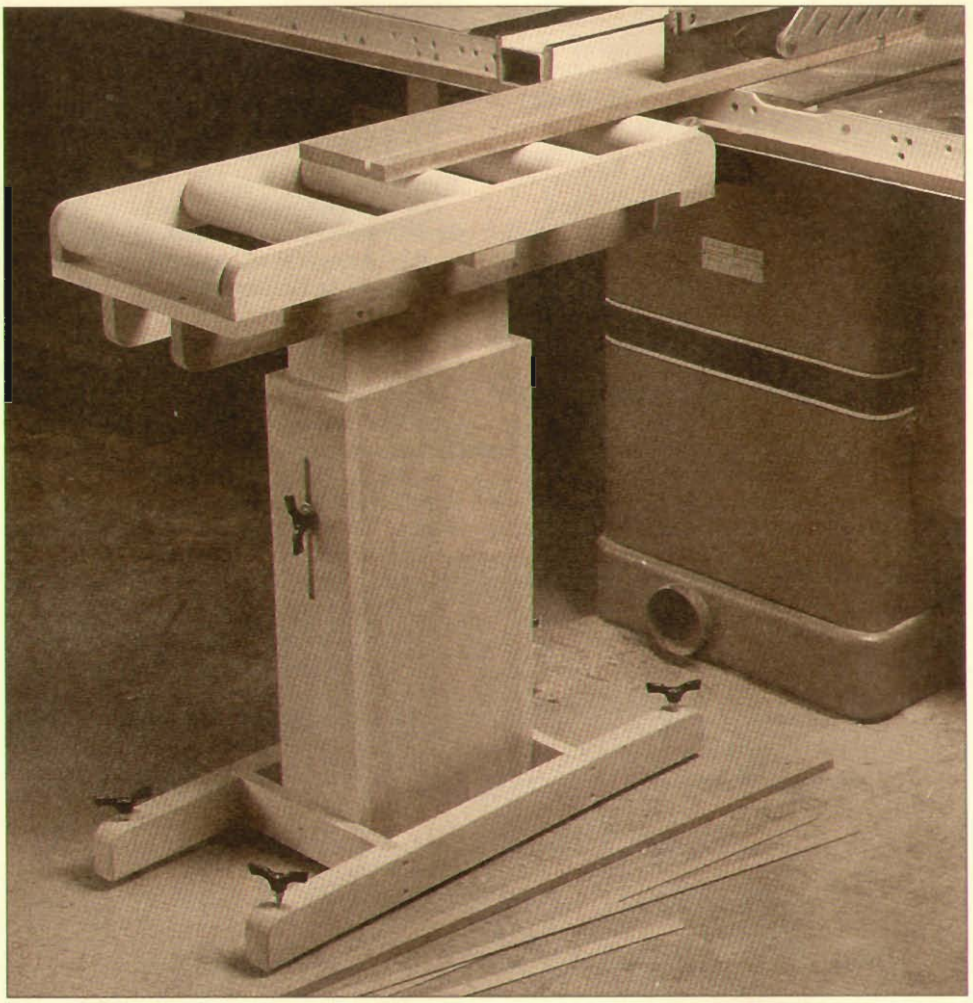

The biggest problem with making a roller stand is the rollers. Manufactured rollers can get costly — especially if you want a stand with more than one roller. And shop-made rollers can be tricky to make — until now.

Combine PVC pipe with some steel rod and wooden toy wheels and you've got an easy, strong, and inexpensive way to make rollers. I used 2"-dia. PVC pipe (used for plumbing drain lines) for the rollers and plugged the ends with wooden toy wheels. And for the axle, I used a piece of steel rod.

When the roller problem was solved, I concentrated on building extras into the stand.

**HEIGHT ADJUSTMENT.** The roller unit is mounted to a large sliding sleeve that fits inside a pedestal. By loosening a single wing nut, the sleeve can be adjusted to different heights. Plus, for storage, it can be lowered to fit under the extension wings of most table saws.

**LEVELERS.** The handiest feature on the roller stand is the shop-made levelers. You can move the stand around the shop and quickly adjust it for any irregularities in the floor.

## EXPLODED VIEW

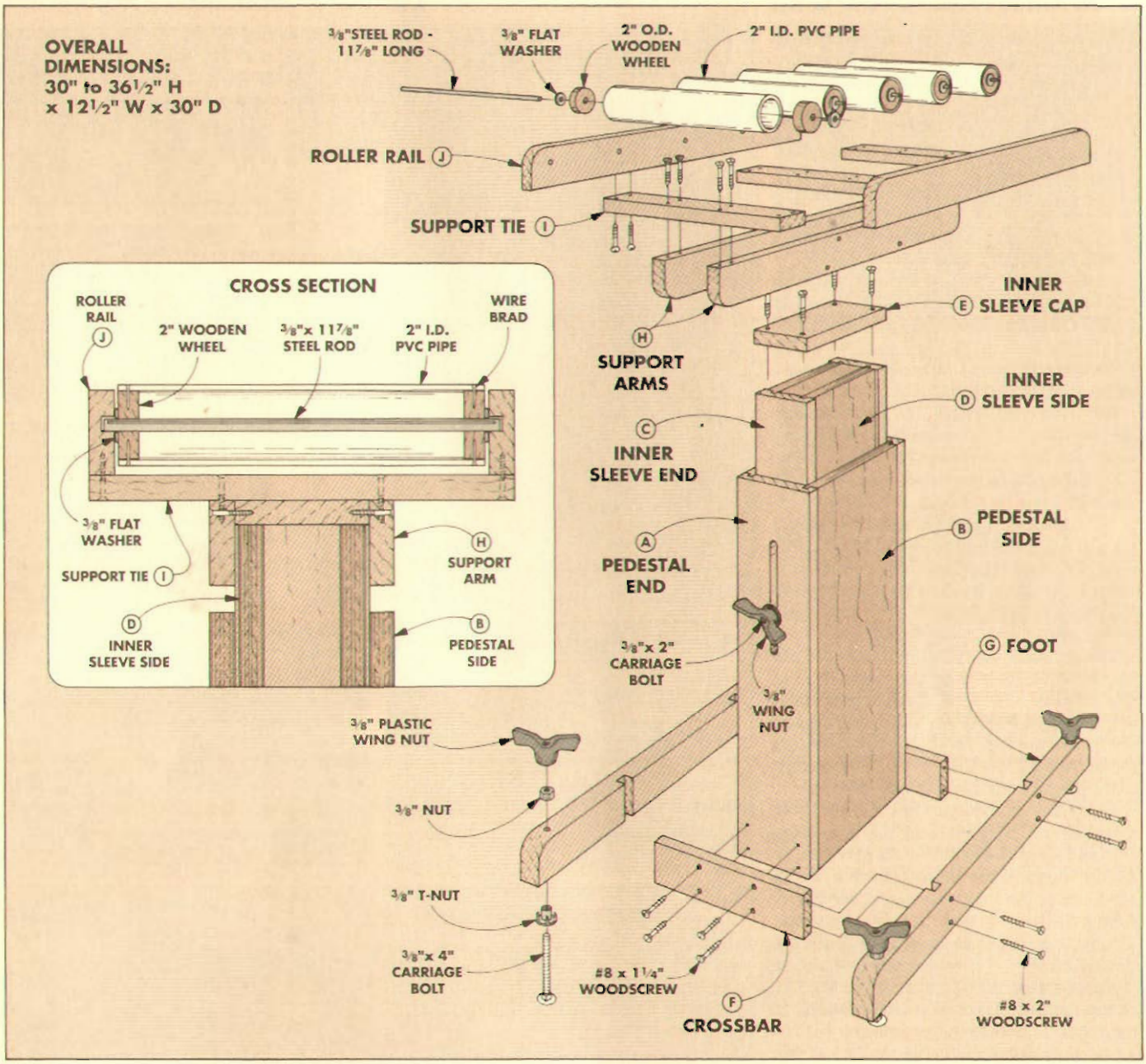


## MATERIALS AND SUPPLIES

### WOOD PARTS

| | | |
|---|---|---|
| A | Pedestal Ends (2) | ¾ x 5½ - 24 |
| B | Pedestal Sides (2) | ¾ ply. - 11 x 24 |
| C | In. Sleeve Ends (2) | ¾ x 3 15/16 - 23 |
| D | In. Sleeve Sides (2) | ¾ ply. - 9 7/16 x 23 |
| E | In. Sleeve Cap (1) | ¾ x 3 15/16 - 10 7/16 |
| F | Crossbars (2) | ¾ x 2½ - 11 |
| G | Feet (2) | 1½ x 2½ - 30 |
| H | Support Arms (2) | ¾ x 2½ - 30 |
| I | Support Ties (3) | ¾ x 2½ - 12¾ |
| J | Roller Rails (2) | ¾ x 2½ - 30 |

### SUPPLIES

- 11.2 Bd. Ft. of ¾"-thick Hard Maple
- ½ Sheet of ¾" plywood
- (4) ⅜" x 4"-long carriage bolts with washers
- (1) ⅜" x 2"-long carriage bolt with a fender washer
- (11) ⅜" Washers
- (4) ⅜" Nuts
- (4) ⅜" T-nuts
- (5) ⅜" Wing nuts
- Five feet of 2" I.D. PVC pipe
- (10) 2" Wooden wheels
- (5) ⅜" x 11⅞"-long steel rods
- (20) Wire brads
- (36) No. 8 x 1¼" Fh. screws
- (8) No. 8 x 2" Fh. screws

## CUTTING DIAGRAM

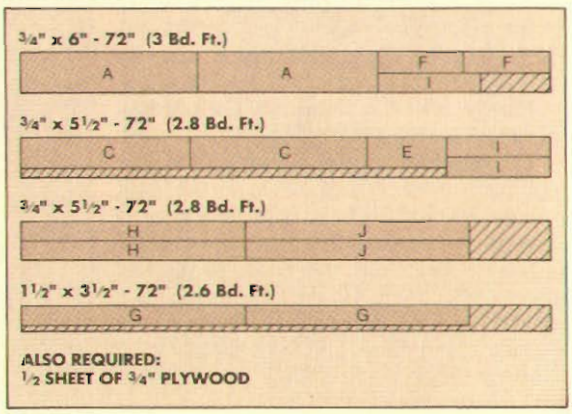

## THE CENTER SUPPORT

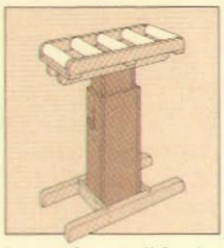

The first step in building the roller stand is to make the center support. This support consists of two parts, a pedestal and an inner sleeve. To adjust the height of the rollers, the inner sleeve slides inside the pedestal and is held in place with a wing nut.

**PEDESTAL.** I started by making the pedestal. Cut the two **pedestal ends (A)** from ¾"-thick solid stock to a width of 5½" and a length of 24". (I used solid stock because it won't crush as easily as plywood when the wing nut is tightened.)

Once the ends are cut, the next step is to cut the two **pedestal sides (B)**. Since there won't be any pressure placed on these pieces, I used ¾" plywood. Cut each side piece 11"-wide by 24"-long, see Fig. 1.

**TONGUE AND GROOVE JOINT.** With the ends and the sides cut to size, the next step is to join them together. The tricky part is keeping the pedestal the same size from top to bottom. To do this, I used a tongue and groove corner joint, refer to Fig. 4.

Using a dado blade on the table saw, cut two ¼"-wide grooves on the inside faces of the end pieces (A), see Fig. 2. These grooves are cut slightly deeper than the tongue (5/16") and are located so the distance from the fence to the far side of the blade is equal to the thickness of the plywood sides (¾").

Once the grooves are cut, I used a ⅜" dado blade to cut tongues on the edges of the plywood sides (B) to fit into the grooves. To cut the tongues, start by attaching an auxiliary fence to the table saw fence, see Fig. 3. Adjust the fence to make a ¼"-long tongue. Then raise the blade gradually until the tongue fits the ¼" groove in the end pieces.

**ADJUSTMENT SLOT.** Before gluing the pieces together, I routed a slot for the adjustment bolt in one of the end pieces (A). To locate the start and stopping points of this slot, drill two holes centered on the width of the end piece, see Fig. 5. The center points of these holes are 7" apart, with the center point of the top hole being 3½" from the end. Then rout the slot on the router table by making several shallow cuts, see Fig. 6.

Finally, after the slot is cut, the pedestal pieces (A and B) can be glued up.

**INNER SLEEVE.** Once the pedestal is complete, the next step is to make the inner sleeve. The inner sleeve is made the same way as the pedestal, except the plywood sides are inset from the edges of the end pieces, refer to Fig. 10. I did this for a couple of reasons. First, the edges of the end pieces will act like runners and keep the plywood sides from binding. Second, if need be, these runners can be planed to fit.

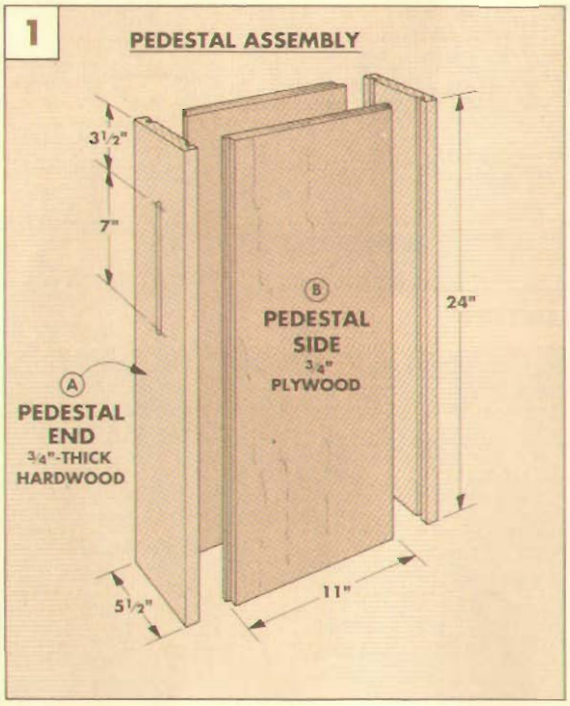


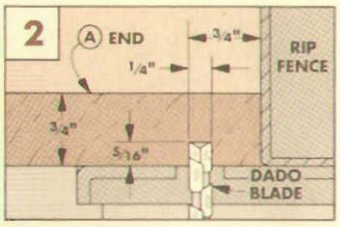


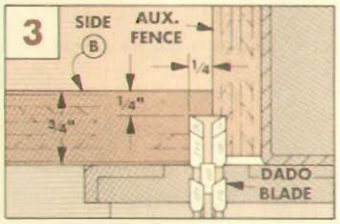


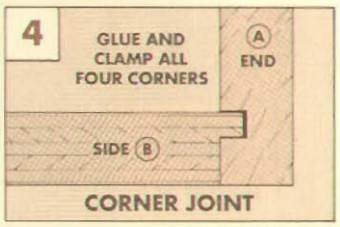


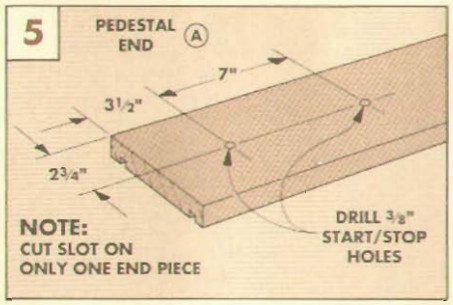


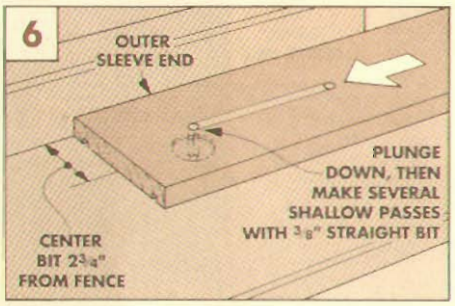


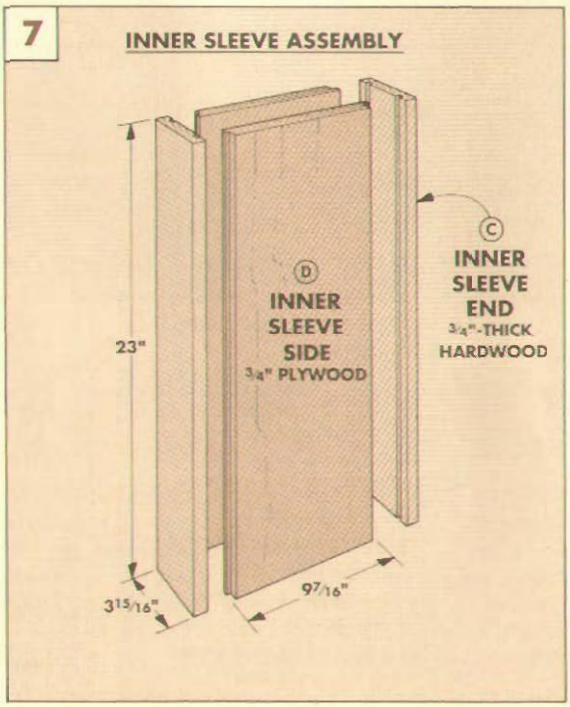


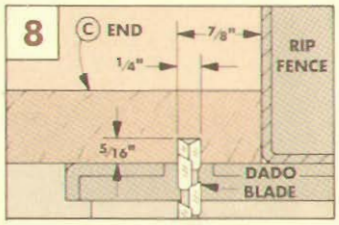


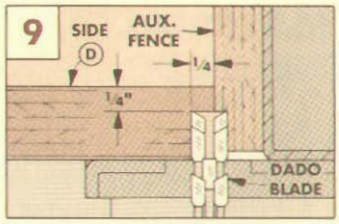


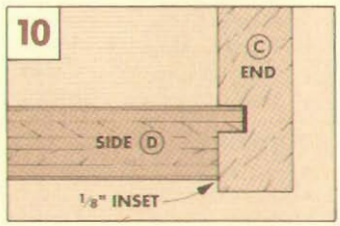

## CENTER SUPPORT (cont.)

**CUT THE END PIECES.** To make the inner sleeve, start by ripping the two **inner sleeve ends (C)** to fit inside the pedestal with 1/16" of clearance. Next, cut these two pieces to length (23"), see Fig. 7.

**SIDE PIECES.** After the ends are completed, the next step is to cut the **inner sleeve sides (D).** Start by measuring the inside width of the pedestal. Then subtract 1 1/16". When assembled this will give you 1/16" clearance between the pedestal and the sleeve. Now, cut the 3/4" plywood sides to their finished size. (In my case this was 9 7/16" wide by 23" long, see Fig. 7.)

**GROOVE ENDS.** Once all of the inner sleeve pieces (C and D) are cut to size, the inside face of the end pieces (C) are grooved to accept the sides. This time set the saw fence 7/8" to the far side of the 1/4" dado blade and cut the 5/16"-deep grooves in both end pieces (C), see Fig. 8.

**CUT TONGUES.** Then, to make the tongues on the ends of the plywood sides, attach an auxiliary fence to the saw fence, see Fig. 9. Using a 3/8" dado blade, I cut the 1/4"-long tongues to fit into the grooves.

**GLUE AND FIT SLEEVE.** Finally, glue the end and side pieces together to form the inner sleeve. Once the glue is dry, test fit the inner sleeve into the pedestal. It should slide without binding. If it does bind, you will have to plane or sand the edges or the outside faces of the inner sleeve end pieces (C).

**HOLE FOR ADJUSTMENT BOLT.** The sliding inner sleeve is held in place with a carriage bolt and a wing nut. To determine the location of this bolt, position the inner sleeve 2" above the pedestal and clamp it with a C-clamp, see Fig. 11. Now, using a 3/8" drill bit, place the bit in the bottom of the slot in the pedestal and drill completly through the inner sleeve.

Next, reach down into the inner sleeve and push a 3/8" x 2" carriage bolt through the hole, see Fig. 12. Then tap the head of the bolt with a hammer to make sure it's seated.

Then, to keep from marring the wood, I put a fender washer and a standard washer over the bolt and threaded on a 3/8" wing nut. (I used a large plastic-handled wing nut, see Sources on page 31. If you prefer to make your own wing nuts, see the box below.)

**INSTALL THE CAP.** Finally to finish off the inner sleeve, I added a hardwood cap. To make the **inner sleeve cap (E)**, simply cut a piece of 3/4"-thick stock to fit flush to the outside edges of the inner sleeve, see Fig. 13. Then drill countersunk screw holes and screw the inner cap (E) into the inner sleeve end pieces (C).

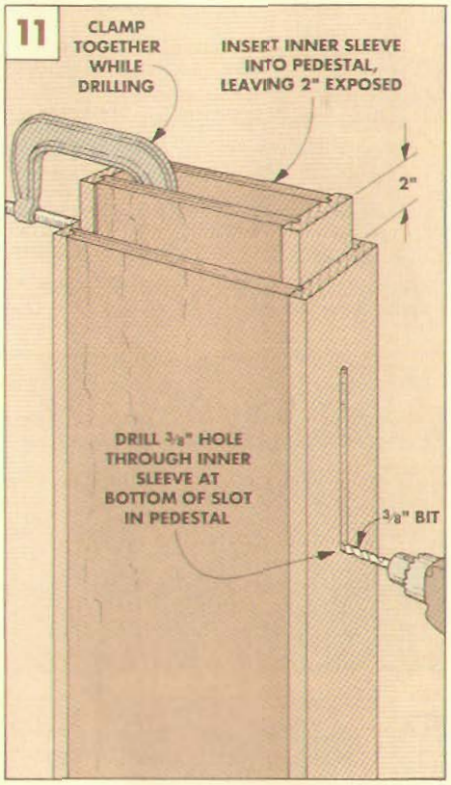


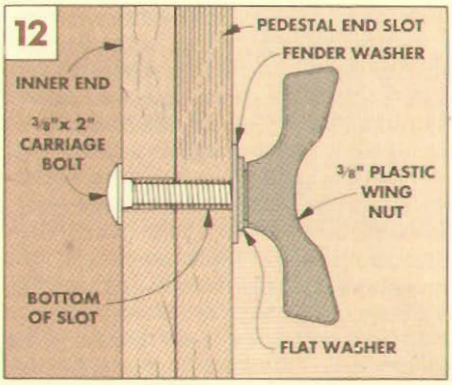


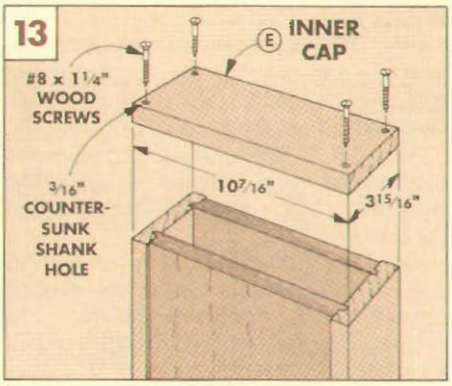


## SHOP-MADE WING NUT

Before I found the large *plastic* wing nuts that I used on the roller stand, I had planned on using shop-made wooden ones. They work so well, we decided to show them as an option for the roller stand. In fact I'd recommend them over small metal wing nuts. These large wing nuts are more comfortable to grip and you can use them to exert more pressure.

To make a wing nut start with 3/4"-thick stock. Then drill a counterbored hole for a T-nut to fit into, see Step 1. (In my case I was using a 3/8" T-nut so I drilled a 1" counterbore and a 1/2" hole.)

Next, I cut tapered sides (on the band saw) to make the wing nut easier to grab, see Step 2. Then to reduce the amount of surface contact, I sanded a taper on the bottom side.

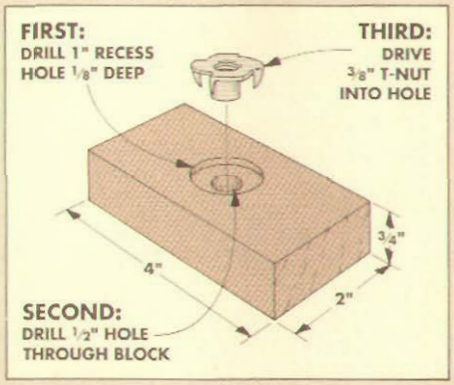


**1** *Starting with a small scrap block, drill a 1/8" deep counterbore. Next, drill a hole through the piece for the T-nut to fit into. Then drive the T-nut in place.*

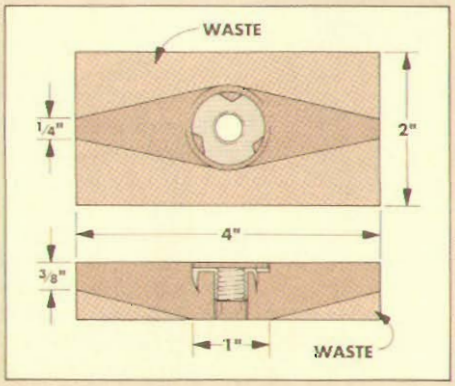


**2** *To make the wing nut easier to hold, trim down the sides of the block. Then sand a gentle taper off the bottom side of the wing nut and sand off any sharp edges.*

## THE BASE

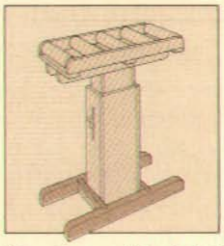

Once the center support is complete, the next step is to make the base to support it. The base is made up of two parts: the crossbars and the feet.

THE CROSSBARS. Starting with ¾"-thick stock, cut two **crossbars (F)** to their finished size, see Fig. 14. Then, position the crossbars so they're centered and flush with the bottom of the outer sleeve. Now, drill four countersunk screw holes in each crossbar and screw them in place.

FEET. With the crossbars attached, the next step is to make the feet. I made the **feet (G)** from 1½"-thick stock cut to a finished width of 2½" and length of 30", see Fig. 15.

Next, put the feet against the crossbars so they extend equal amounts on both ends. Now, mark where the crossbars intersect the feet, see Fig. 15.

Once the feet are marked, cut the ¾"-deep dadoes to match the thickness of the crossbars (¾"), see Figs. 16 and 16a.

Next, I sanded the top edge on the ends of the feet to a 1" radius, see Fig. 17

LEVELERS FOR THE FEET. To keep the roller stand from rocking on an uneven floor, I added a leveler on each end of the feet. These levelers are simply ⅜" x 4" carriage bolts threaded through a T-nut, see Fig. 17.

To make it easier to adjust the levelers, I threaded on a plastic wing nut (or the shop-made wing nut shown on page 21.)

ATTACH THE FEET. Finally, screw the feet to the crossbars, see Fig. 18.

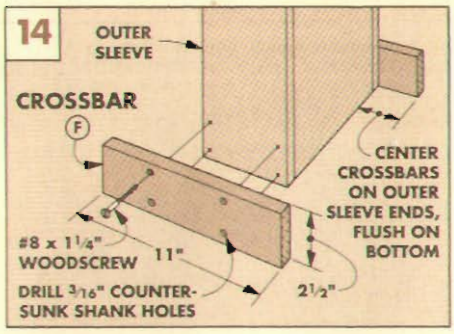


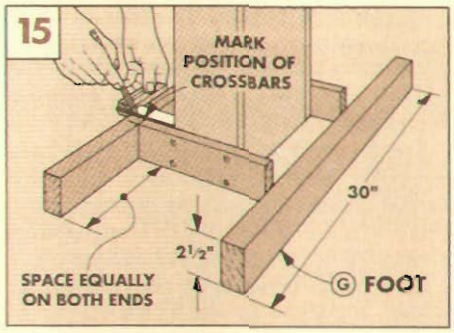


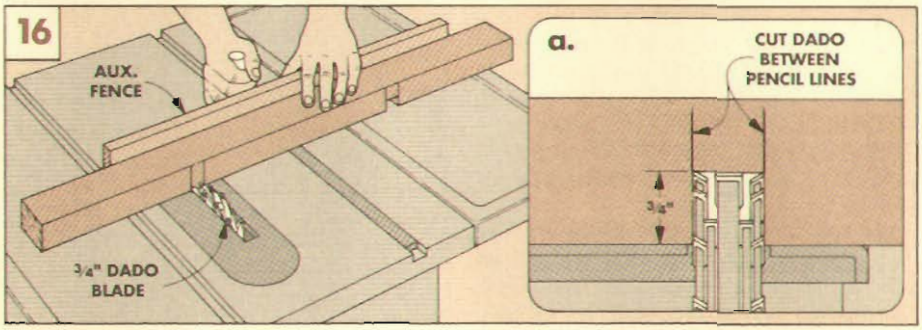


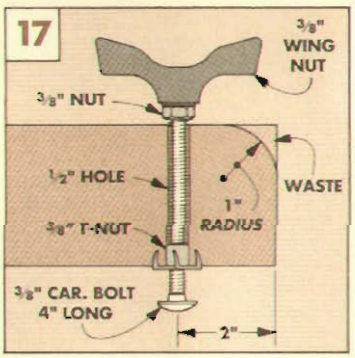


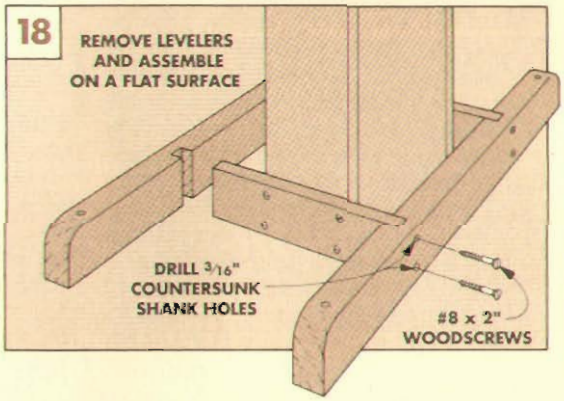


## ROLLER SUPPORTS

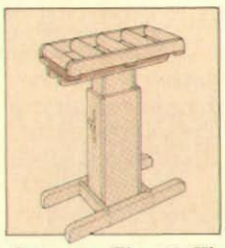

Having completed the base, I started building the supports for the rollers. Begin by cutting the ¾"-thick **support arms (H)** and **support ties (I)** to their finished dimensions, see Fig. 19. Then sand a 1" radius on the bottom corners of the support arms.

ATTACH ARMS. Next center the arms on the inner sleeve, keeping the arms flush with the top edge of the cap (E). Now mark the location of the screw holes so the top screws go into the edge of the cap (E) and the lower ones go into the edges of the end pieces (C), see Fig. 19. Then drill countersunk shank holes and screw the arms to the sleeve.

ATTACH TIES. To complete the roller support, screw the three support ties (I) across the top edge of the arms, see Fig. 19a.

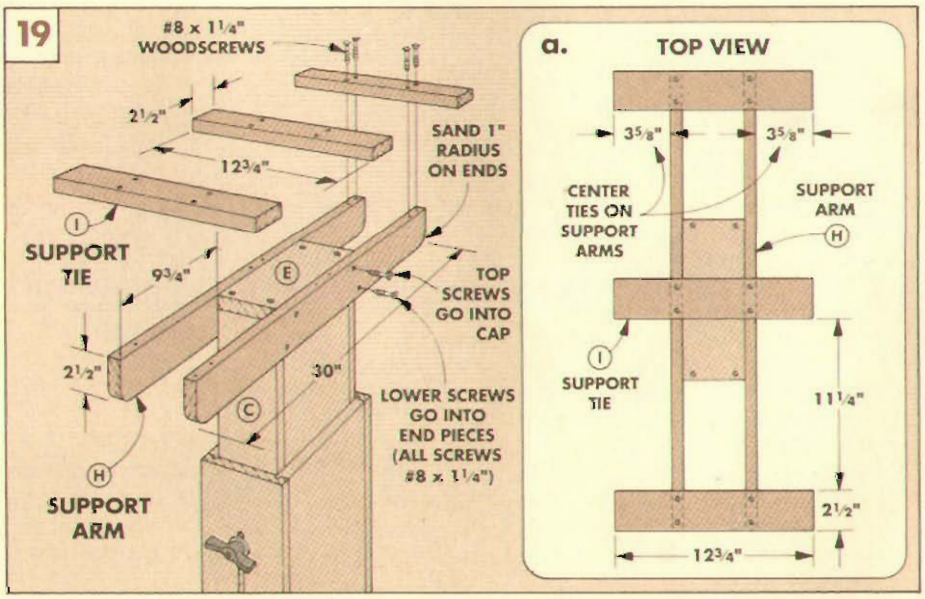

## ROLLERS

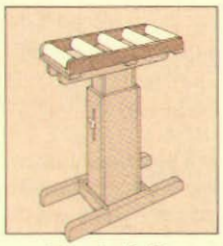

With the roller support completed, I started working on the heart of this project — the rollers.

Each of the five rollers is made from a section of 2" PVC pipe. This pipe is used for drain lines and is sold by the foot.

**CUT ROLLERS TO LENGTH.** To make the rollers, begin by cutting the pipe into five 11"-long tubes. I cut these to length with a hand saw (or hack saw) and sanded the ends.

**WOODEN WHEELS.** After filing off the burrs, the tubes are plugged to support a steel axle rod. I plugged the ends with 2" hardwood toy wheels, see Fig. 20. These wheels come pre-drilled to the correct size for the 3/8" steel rod that supports the roller.

Note: We are offering these wheels through *Woodsmith Project Supplies*, see page 31. Or you can make your own wheels by using an adjustable circle cutter.

To make up for any irregularities on the inside of the tubes or the outside of the wheels, wrap electrician's tape around the wheels before pushing them in flush to the ends of the tubes. Then pin them in place with two 17-gauge wire brads, see Fig. 20a.

**STEEL AXLE RODS.** Next, to support the rollers, I cut five pieces of 3/8" steel rod. Each piece is cut 11 7/8" long and inserted through the hole in the wheels. Then, to keep the rollers spaced properly I put a 3/8" flat washer on each end of the rod, see Fig. 20a.

**THE RAILS.** All that's left to make are the **roller rails (J)**. These rails are screwed to the support ties (I) and hold the rollers in place. Using 3/4"-thick stock, cut the rails to their finished size, then sand a 1" radius on the top corners, see Fig. 21.

Next, drill five 7/16" holes on the inside face of each rail. These holes are 3/8"-deep and centered 7" apart, see Fig. 21.

Finally, screw one of the rails (J) to the top of the support ties (I). Then insert the roller assemblies into this rail. To keep the rollers at the correct height while I installed the other rail, I placed a 1/4"-thick temporary spacer under one end, see Fig. 21.

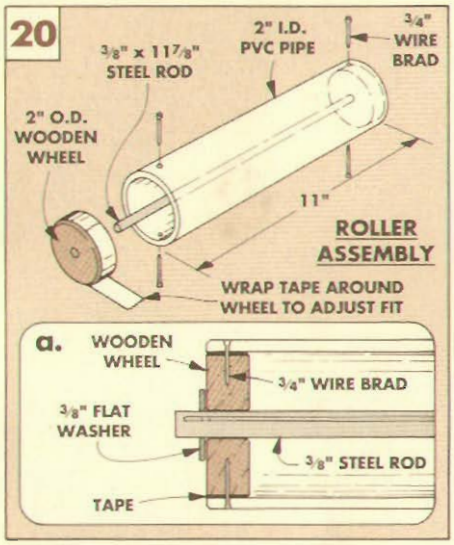


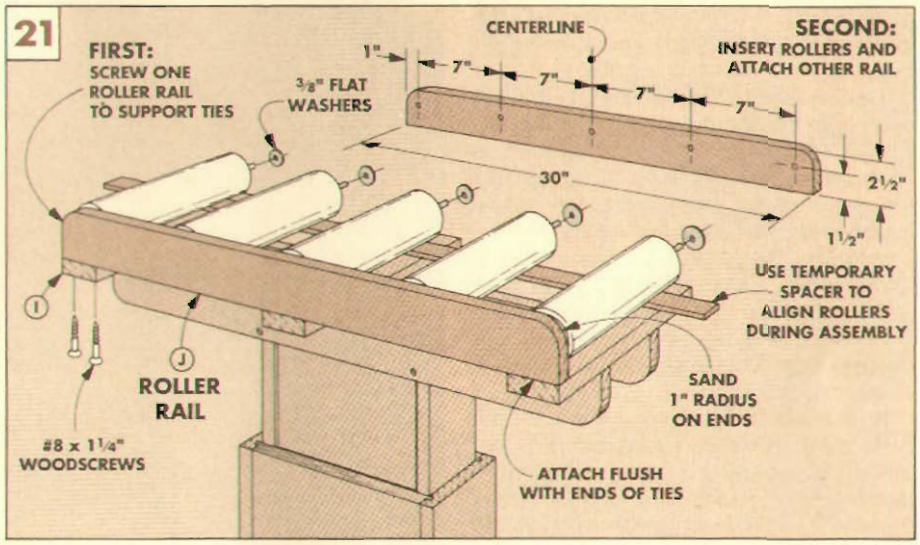


## WIDE ROLLER STAND

The roller stand featured above works great, but sometimes it would be nice if it were wider. The extra width is handy when working with plywood panels.

In fact, you could use both of these stands at the same time. Position the wide roller stand behind the saw and the narrow one along the left side.

The procedure for building the wide roller stand doesn't change, the only difference is that four of the parts have to be made longer. This means you'll need more 3/4"-thick stock, a 10-foot length of PVC pipe and longer lengths of 3/8" steel rod. (A hardware kit is available through *Woodsmith Project Supplies*, see page 31.)

**CROSSBARS.** The first pieces that need to be lengthened are the two crossbars (F). Instead of 11" long, cut these pieces 22" long. This extra length is needed to keep the roller stand from tipping side-to-side.

**SUPPORT TIES.** Next, adjust the length of the three support ties (I) for the longer rollers. Cut the ties 22 3/4" long.

**ROLLERS.** With the support ties cut to length, the next step is to cut the longer rollers. Each of these five 2" PVC rollers have to be 22" long.

**STEEL RODS.** Finally, the last parts that need to be cut longer are the five 3/8" steel rods. These rods will need to be 22 7/8" to support the longer rollers.

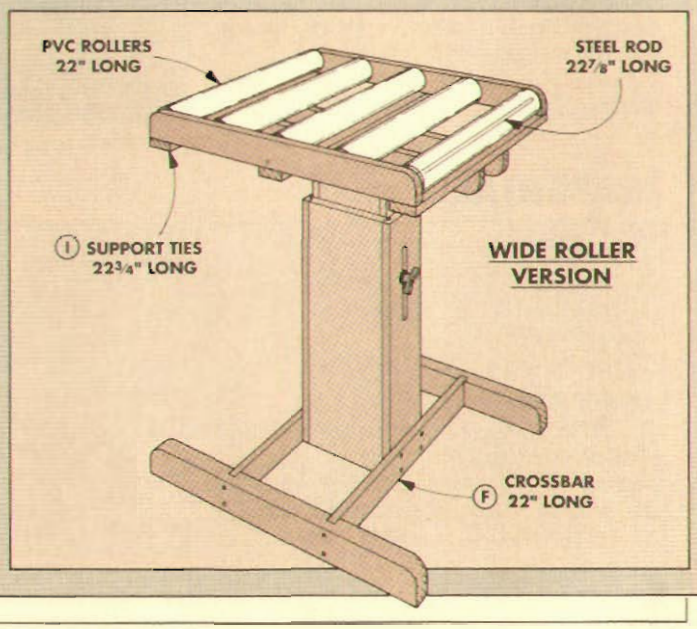

# Mailbox

*It doesn't have a lid. Instead, this mailbox is designed with an inner bin that pivots out. The bin is sized to hold magazines and oversized envelopes so they don't have to be folded (or mangled) to get them in and out.*

Enough is enough. My old mailbox was too small to hold my favorite woodworking magazine without folding it and mangling it every time it arrived. Either I had to ask *Fine Woodworking* to reduce the size of their magazine, or I had to build a new, larger mailbox. I decided to build a new mailbox.

The idea behind this mailbox is to build an outer case that houses an inner bin that actually holds the mail. When you pull down on the brass knob, the inner bin pivots out, like the glove box on some cars. Mail can be inserted easily (without folding it).

**JOINERY.** The joinery for this project is fairly simple. I assembled the outer case with butt joints and brass screws. (The screws are set into counterbores and plugged to prevent moisture from seeping in along the screws and rotting the wood.)

**RAISED PANEL.** The front of the inner bin is dressed up with a raised panel. If you haven't tried making a frame with a raised panel, this is a fairly easy approach. The frame is joined with stub tenons that fit into the same groove as the panel.

**WOOD AND FINISH.** I chose white oak for the mailbox because it resists decay. To protect the wood, I finished the mailbox with two coats of spar varnish. (Spar varnish is designed for outdoor use — it's more moisture resistant than other varnishes.)

A hardware kit is available for the mailbox, see Sources on page 31.

## MATERIALS

### OUTER CASE

| | | |
|---|---|---|
| A | Sides (2) | ¾ x 5½ - 14½ |
| B | Top (1) | ¾ x 5⅜ - 17¾ |
| C | Bottom (1) | ¾ x 5⅜ - 17¾ |
| D | Hanger Strip (1) | ¾ x 1⅜ - 17¾ |

### INNER BIN

| | | |
|---|---|---|
| E | Sides (2) | ¾ x 4 5/16 - 10 7/16 |
| F | Rails (2) | ¾ x 1¼ - 15¾ |
| G | Stiles (2) | ¾ x 1¼ - 10½ |
| H | Panel (1) | ¾ x 8⅝ - 15⅝ |
| I | Bottom (1) | ¾ x 2¼ - 16 |
| J | Back (1) | ¼ x 10 - 17½ |

### SUPPLIES

- 6.6 Bd. Ft., ¾"-thick white oak
- 12" x 24" ¼"-thick Masonite for inner case back
- (10) No. 8 x 1¼" Fh woodscrews
- (4) No. 12 x 1½" Rh brass woodscrews
- (20) No. 6 x ½" Fh woodscrews
- (1) 6" extension spring
- (1) 9" brass chain
- (1) brass knob
- (1) tube silicone sealant
- (1) pint spar varnish

## CUTTING DIAGRAM

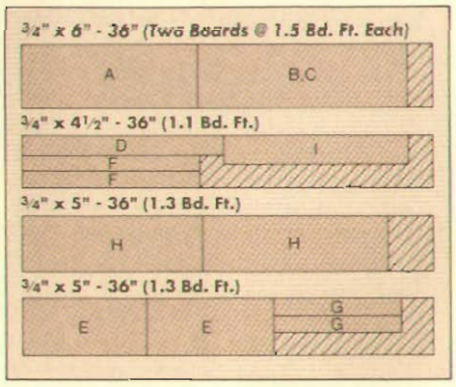

## OUTER CASE

I began building the mailbox by making the sides for the outer case.

SIDES. To make the **outer case sides (A)**, start by cutting two ¾"-thick blanks to a finished width of 5½" and rough length of 15". Then cut a 10° angle on each end so the overall length equals 14½" to the long points of the angled cuts, see Fig. 1.

After the angles have been cut, mark the *outside* face of each side and lay them down as a mirrored set, see Fig. 1. Now mark the locations of the holes for the four assembly screws on each side, and the pivot screws near the bottom front of each side, see Fig 1a.

Once the holes are laid out, drill ⅜" counterbores and 3/16" shank holes for the assembly screws. Next, drill ¼" holes for the pivot screws. (The pivot screws allow the inner bin to pivot within the outer case.)

After the holes are drilled, rout a ⅛" chamfer on all but the back edges of both side pieces, see Fig. 1.

CASE TOP AND BOTTOM. With the sides complete, work can begin on the **outer case top (B)** and **bottom (C)**. Rip the back edge of both pieces at 10° so the pieces are 5⅜" wide to the long point, see Fig. 2. Then cut each to a length of 17¾".

MOUNTING HOLES. Although the hanger strip (D) used to mount the mailbox (see exploded view at right) is added later, it's easier to drill the holes for it now, see Fig. 2.

Also, rout a ⅛" chamfer on the front edges of the top and bottom, see Fig. 2.

## EXPLODED VIEW

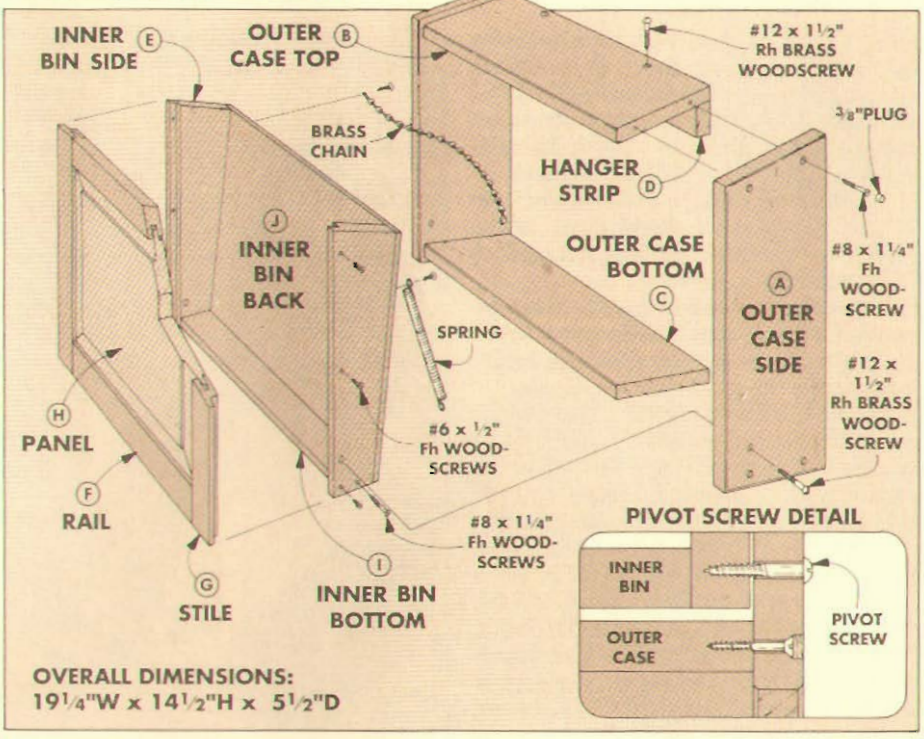


ASSEMBLY. To start assembly, draw a line across the inside face of the sides (A) ¼" in from the top and bottom ends (not the chamfer), see Fig. 3a. Then, clamp the case together so the top and bottom pieces align with these pencil lines, see Fig. 3.

With the four pieces for the outer case clamped together, drill 3/32" pilot holes at all assembly screw locations. Then screw the case together, see Fig. 3b. To cover the screws, cut ⅜" plugs from scrap. Glue the plugs in place, and trim them flush.

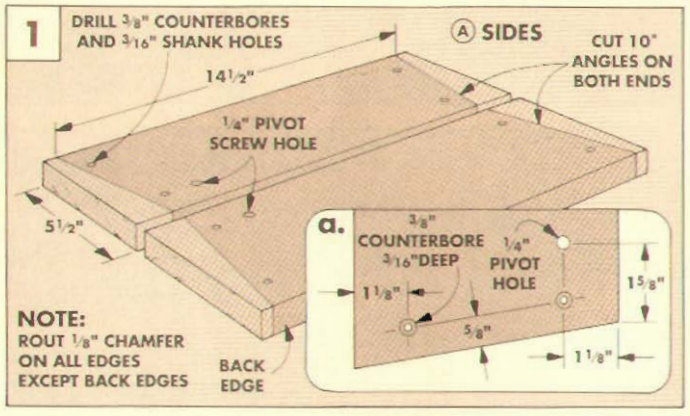


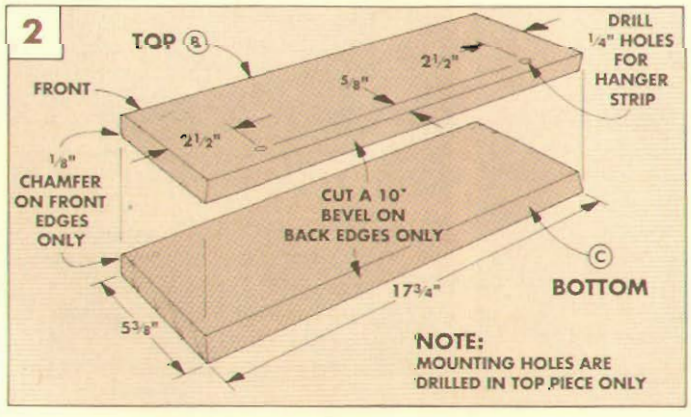


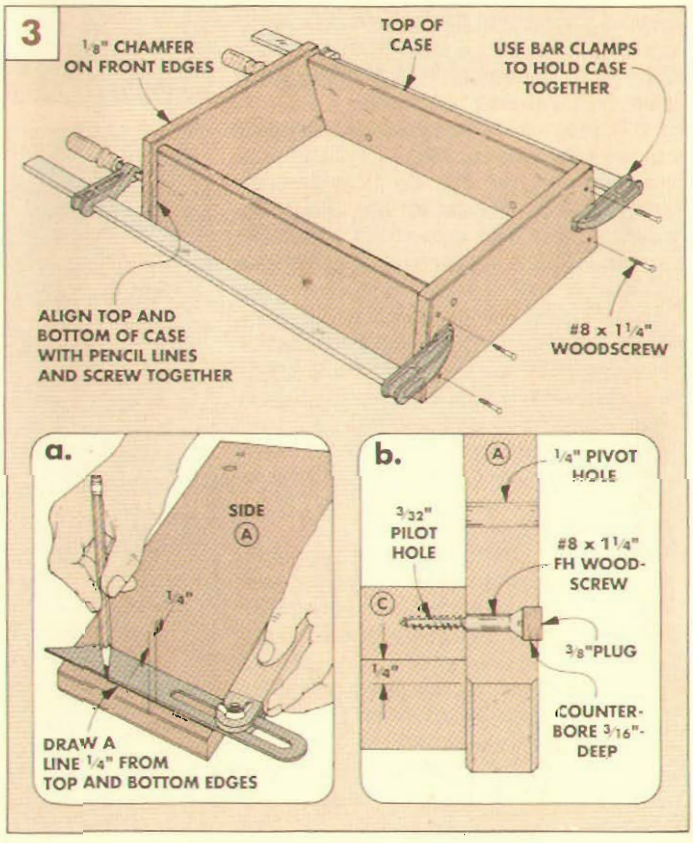

# INNER MAIL BIN

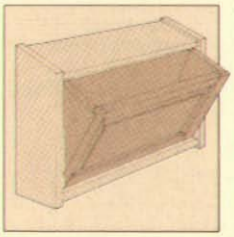

The inner mail bin has a front frame with a raised panel. I began construction by ripping the **rails (F)** and **stiles (G)** to a width of 1¼", see Fig. 4. Then, cut the rails to a length of 15¾" and stiles to 10½".

The next step is to cut a groove to hold the panel in place. I used a table saw to cut a ¼"-wide groove centered on the inside edges of the stiles and rails, see Fig. 4a.

To join the frame together, stub tenons are cut on the end of the rails, see Fig 4a. I did this by cutting rabbets at the ends of the rails, creeping up on the final depth of cut so the remaining stub tenon fit in the groove.

**PANEL.** Next, work can begin on the raised **panel (H)** that fits into the frame. To determine the size of the panel, dry-clamp the frame together and measure the inside frame opening. Add ⅝" to these dimensions. This way the panel's edges will extend 5/16" into the grooves. Then cut the panel to size (mine measured 8⅝" by 15⅝").

To cut the raised profile on the front of the panel, tilt the table saw blade to 11° and set it 1¼" high, see Step 1 in Fig. 5. It helps to add a tall auxiliary fence to support the panel as it's pushed through to make the cut.

Next, cut a ⅜"-wide rabbet along the back edge of the panel, see Step 2 in Fig. 5. This forms a tongue that fits into the grooves in the frame. Sneak up on the depth of the rabbet until the tongue fits snugly in the frame grooves, but doesn't bottom out.

**ASSEMBLY.** With the panel cut, assembly can begin by applying silicone sealant in the frame grooves, see Fig. 4b. (This prevents water from accumulating but allows the panel to move with changes in humidity.) After the sealant is applied, apply epoxy glue (it's waterproof) to the stub tenons on the rails, and clamp the frame around the panel.

**JOINERY.** The front frame will be joined to the sides of the inner bin with a double rabbet joint. For now, rout a rabbet on the back edge of the frame stiles, see Step 1 in Fig. 6.

There's one more step on the front frame. *To allow the inner bin to pivot out without* binding, cut or plane a 10° bevel on the top edge, see Step 2 in Fig. 6.

**SIDES.** With the front frame complete, next cut two **inner bin sides (E)** 4 5/16" wide and 10 7/16" long, see Fig. 7. Then cut a 10° taper on the back edge of each side. (I used the band saw and planed to the layout line.)

Next, cut the angle on the top end of the sides by placing the tapered edge against the table saw's miter gauge, see Fig. 8.

Finally, rout the other half of the double rabbet along the front *inside* edge of each side piece, see Fig. 9.

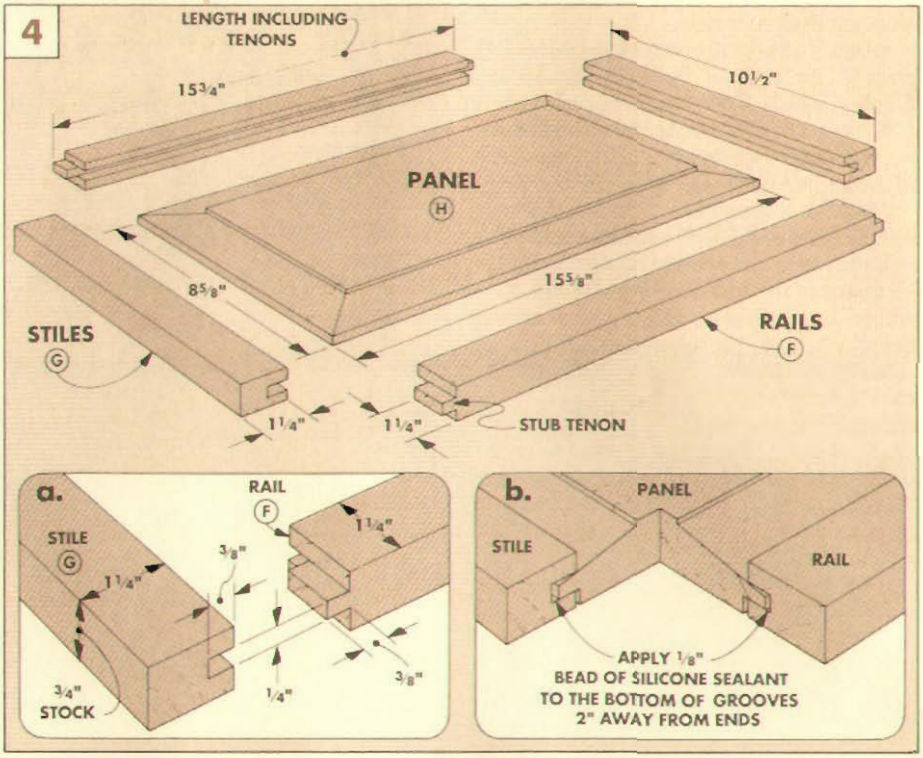


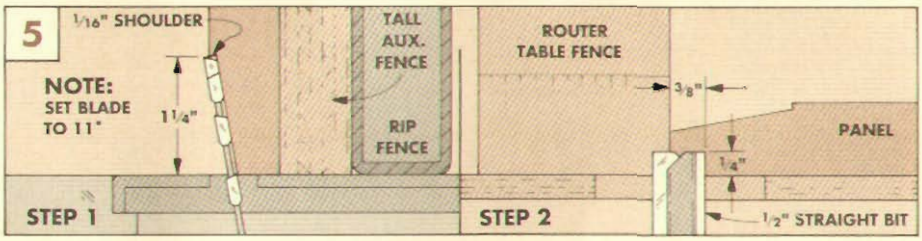


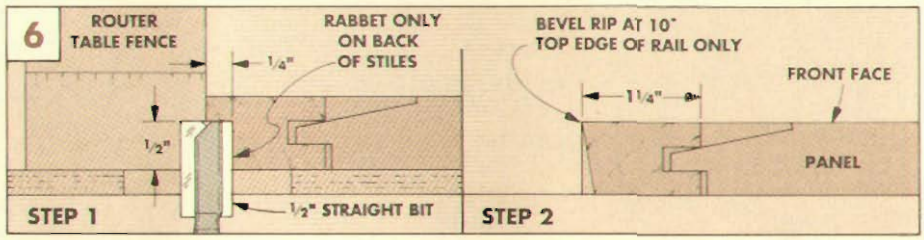


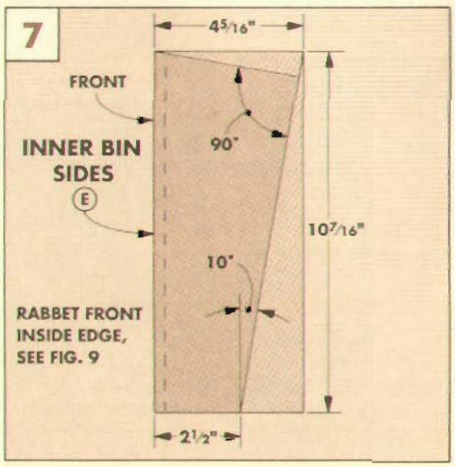


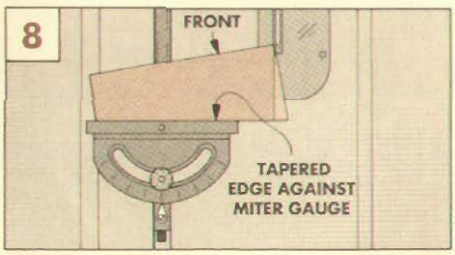


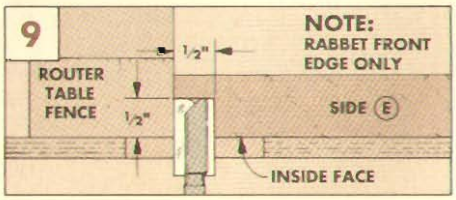

## ASSEMBLY

To assemble the inner bin, first dry-clamp the sides to the front frame assembly, see Fig. 10. Then drill three holes on each side and screw the sides to the front frame.

**BOTTOM.** Now the **bottom (I)** can be cut to length to fit between the sides. Before installing this piece, rip a 10° bevel on the back edge (to match the angled back edge of the sides). Then rip this piece to width to fit against the front frame, see Fig. 10.

Secure the bottom in place by applying a bead of epoxy glue on the front edge and screwing it in place through the sides.

**BACK.** Once the bottom is installed, cut the **back (J)** from ¼" Masonite to fit and screw it in place, see Fig. 10.

**FINISH.** Before going any further, I sanded the inner bin and the outer case and finished them with two coats of spar varnish.

**MAILBOX ASSEMBLY.** To mount the inner bin inside the outer case with the correct spacing, first lay down two ¾"-thick spacer strips and place the inner bin on top of these strips, see Fig. 11.

Next, slide the outer case over the inner bin. To create a uniform gap around the inner bin, I used shims. To determine the thickness of the shims, push the inner bin against the bottom of the case. Measure the gap at the top and divide by 2. Then cut four shims equal to this dimension and place them as shown in Fig. 11. (The inner bin can be centered on the width of the outer case by adjusting the pivot screws later.)

With the shims in place, drill 3/16" holes in the inner bin for the pivot screws. (Center the bit through the hole in the *outer* case, see Fig. 11.) Then install No. 12 Rh screws as pivots, see Pivot Screw Detail on page 25.

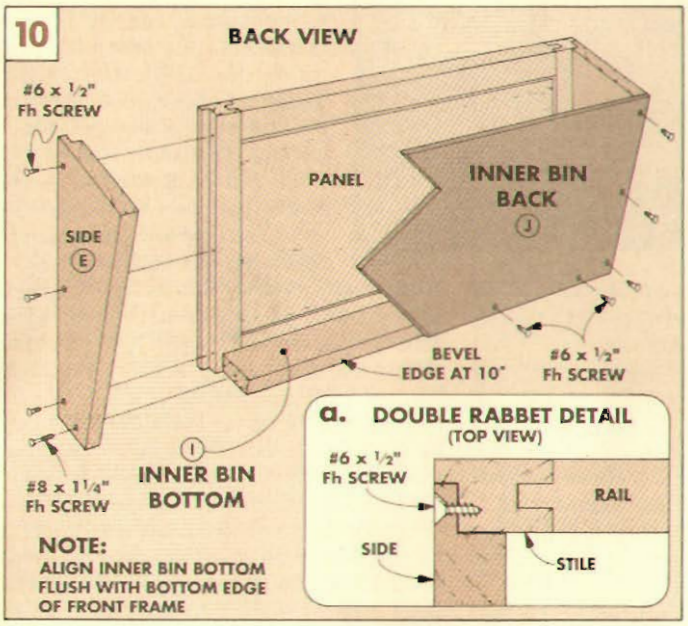


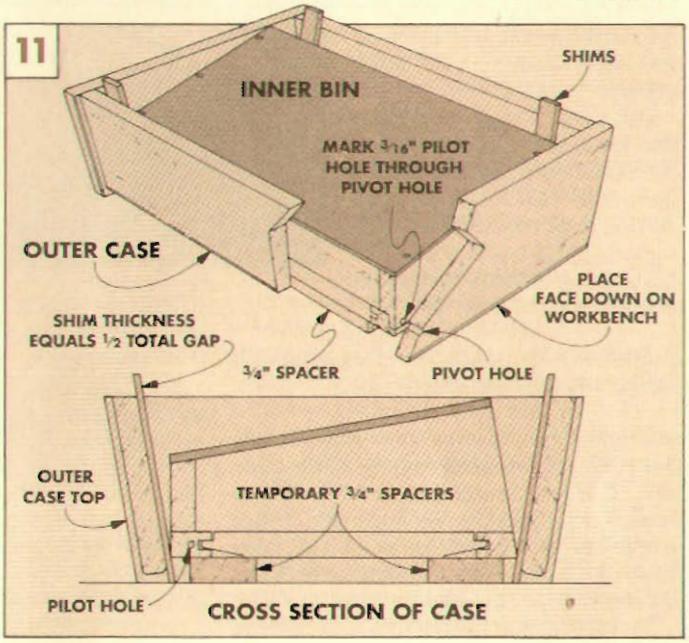


## HARDWARE

The final step before hanging the mailbox is to mount the hardware, see Fig. 12. A spring helps the inner bin return into the outer case. And a chain keeps the inner bin from pulling out too far.

Locate and drill screw holes to mount the spring and chain on the back of the inner bin and inside faces of the outer case sides (A), see Fig. 12. (You can vary the spring tension by adjusting where the holes are drilled.) After installing the spring and chain, I mounted the brass knob centered on the top rail (F) of the front frame, see Fig. 13.

Next, rip a **hanger strip (D)** to an overall height of 1⅜" with a 10° bevel on the top edge, see Fig. 14. Then cut it to length to match the inside width of the outer case.

Now, mount the hanger strip in the desired location on the front of the house. Then set the mailbox on the hanger strip and drill pilot holes through the top outer case shank holes for No. 12 x 1½" roundhead brass woodscrews, and screw the mailbox in place, see Fig. 14.

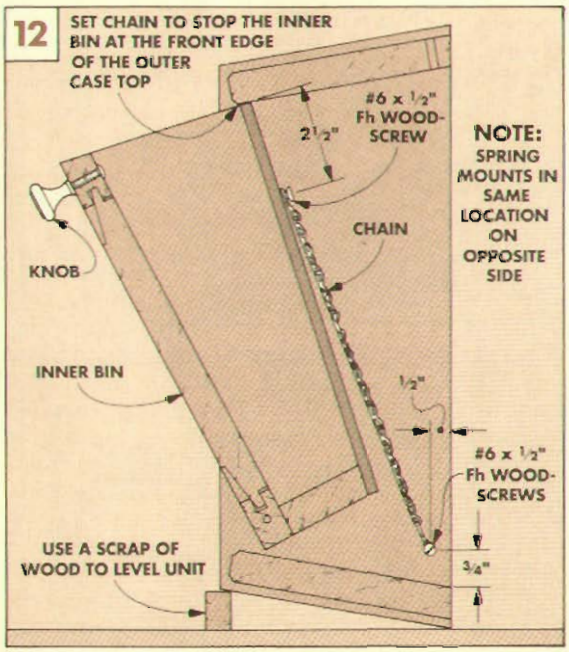


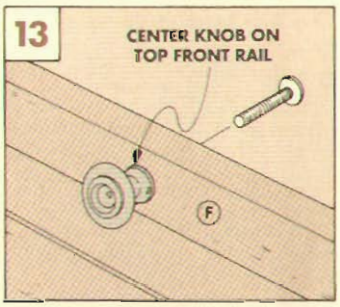


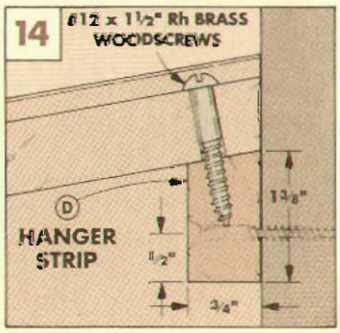

# Table Saw: Ripping

If I had to pick only one reason for owning a table saw, it would be the ability to rip (cut with the grain). No other tool in the shop can rip through stock as accurately and as safely as the table saw.

Perhaps, because ripping seems like such a simple operation for a table saw, it's often taken for granted.

But there's more to ripping than just pushing a piece of stock through the saw. In fact, the two parts of the table saw (the fence and the blade) that make it such a good ripping machine can also cause many of the problems encountered when ripping.

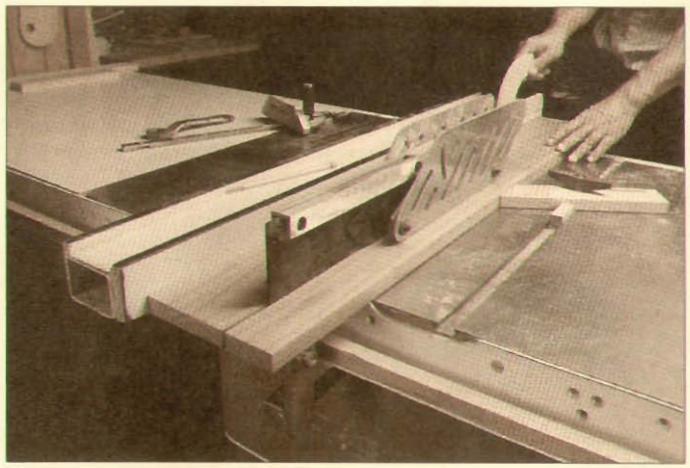

**QUESTION:** *Why does stock bind and burn when I rip on the table saw?*

Binding is probably the most typical problem encountered when ripping on the table saw. The problem can often be traced to alignment. If the blade and the fence are not parallel to each other, the stock can pinch between them, see Fig. 1. This not only causes burning but can cause the stock to kick back.

The problem in getting the blade and the fence parallel is determining whether to adjust the blade or the fence. I approach this problem by using the miter gauge slot as a reference—adjusting *both* the blade and the fence to the miter gauge slot.

The first step is to align the blade to the slot. To do this I make a simple feeler gauge that fits in the miter gauge slot.

**FEELER GAUGE.** The feeler gauge is made up of two parts, a runner and an arm. The runner is cut to fit snug, (but still move freely) in the left-hand miter gauge slot. Then the arm is attached to the runner so it extends to within ¾" of the blade, see Fig. 2. To make the gauge adjustable, simply screw a roundhead screw into the end of the arm that is closest to the blade.

**ALIGN THE BLADE.** To use this gauge, start by unplugging the saw and marking one tooth of the blade with a felt-tip marker. Then adjust the depth of the screw so the head just touches the side of the marked tooth, see Fig. 2. Now rotate the blade so the marked tooth is at the back of the saw. Slide the gauge back until the screw head aligns with the marked tooth, see Fig. 3. Any gap or binding will indicate how much the blade is out of alignment.

To align the blade, loosen the bolts that hold the saw trunnion to the bottom of the table. The trunnion is the assembly that holds the saw arbor (or the motor on direct drive saws) to the underside of the saw table.

Once the blade is aligned, the bolts can be tightened down. (Note: For more on this adjustment, see the owner's manual that came with your table saw.)

**ALIGN THE FENCE.** With the blade aligned, the next step is to align the rip fence to the miter gauge slot. Here again I use the same shop-made feeler gauge to check the alignment of the fence, see Fig. 4.

To check the fence, lower the saw blade below the table. Then, with the feeler gauge still in the left-hand miter gauge slot, slide the fence over to the feeler gauge. Now slide the feeler gauge along the slot and check for any gaps or binding that indicates the fence is out of alignment. Once again, check with your owner's manual to see how to align your rip fence.

Now, both the fence and the blade should be parallel. (For more complete information on adjusting the blade and the fence on a table saw, see *Woodsmith* No. 51.)

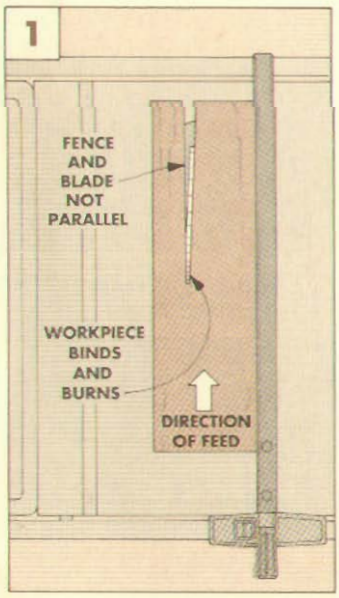


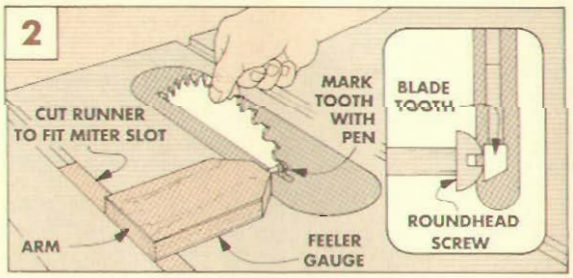


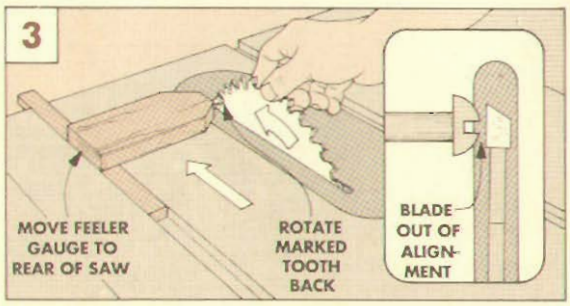


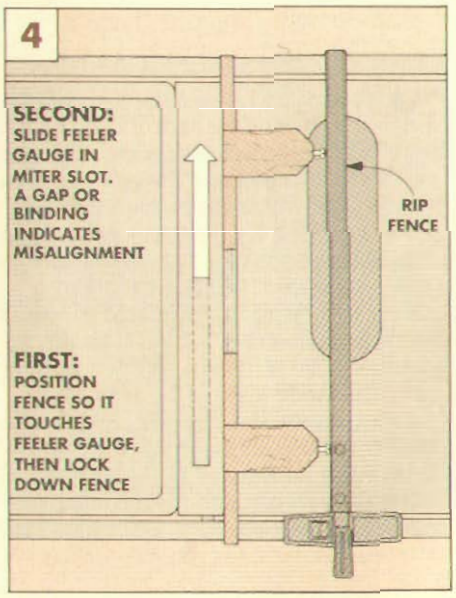

**QUESTION:** *The motor on my table saw always bogs down or throws a circuit breaker when I'm ripping. Is there anything I can do besides buying a more powerful motor?*

Just because your saw bogs down when ripping doesn't mean you need a different motor. There are several factors that affect how well a saw blade cuts through stock. Assuming that the blade and the fence are aligned and the blade is sharp, one simple solution is to feed the stock into the blade at a slower rate.

If your saw is aligned and you're feeding the stock correctly, the problem may be the blade you're using.

**RIP BLADES.** If I plan to do a lot of ripping, I use a 24-tooth carbide rip blade. The teeth on this blade are angled forward more than on a crosscut or combination blade, see drawing below. These angled teeth make a slicing cut, that allows you to feed quickly.

To keep the blade from being overloaded with chips as the stock is fed through, the number of teeth is kept to a minimum. But a blade with few teeth can leave a ragged edge.

To solve this problem, I often use a two-blade ripping technique. I make the first cut 1/16" oversize using a ripping blade. Then I come back and clean up the cut to finished width with a crosscut or combination blade.

**THIN KERF BLADES.** Another option would be to use a thin kerf rip blade. These blades have narrower teeth than on standard carbide-tipped blades. This means there is less resistance when cutting, and your motor shouldn't have to work as hard. (For more on thin kerf blades, see *Woodsmith* No. 53.)

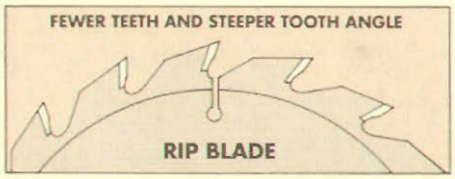

**QUESTION:** *Sometimes when I buy hardwood, the lumber is planed on two sides (S2S) but the edges are still rough (no straight edge). Since I don't have a jointer, what's the best way to get the boards to a uniform width?*

To cut one straight edge on a board, I use a straight-line ripping jig on the table saw. Even if you have a jointer it may be faster to rip a straight edge on the table saw.

**RIPPING JIG.** The ripping jig I use is nothing more than a 12"-wide, 3/4" plywood "sled." The trick is finding a way to hold the stock securely to the plywood sled.

Over the years I've tried various methods of holding the stock in place. The problem has been finding a method that would securely hold the stock *and* be versatile enough to handle different widths and thicknesses.

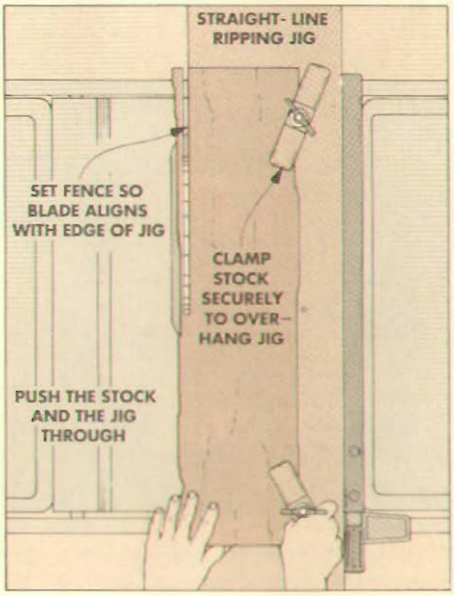


**CLAMPS.** Using a pair of shop-made hold-down clamps (shown on page 30) is the best method I've found yet. In fact they're what make this ripping jig so easy to use.

**USING THE JIG.** To use the jig, clamp the stock down to the jig so one edge extends over *one* edge of the jig, see drawing above. Then set the table saw fence 12" from the blade (same as the width of the jig). Now, to rip the edge straight, simply push the jig and the stock through the saw.

**QUESTION:** *Every once in awhile a piece of stock comes flying back at me when I'm ripping. I've been lucky so far, but how can I avoid the problem in the future?*

The biggest potential problem when ripping on the table saw is *kickback*. Kickback occurs when the blade catches a piece of stock and throws it back at you. Since a table saw blade runs at about 4000 rpm, don't underestimate the force with which a saw blade can hurl a piece of wood.

Typically, most kickback can be traced to one of two possible causes. Sometimes a saw kerf might close up and pinch the back of the blade. Or the piece becomes wedged between the fence and the blade.

**SPLITTER.** The problem of the kerf closing can be solved by using a splitter behind the saw blade. A splitter is usually a flat piece of metal that's mounted to the saw behind the blade and keeps the kerf from closing on the blade. (For more information on a shop-made splitter, see page 5.)

The second problem (the piece wedging between the blade and the fence) can usually be traced to one of two causes: The workpiece pulls away from the fence. Or the operator doesn't follow good ripping techniques.

**FEATHERBOARD.** The problem of keeping the workpiece tight against the fence can often be solved by using a featherboard, see drawing below. Position the featherboard in front of the blade so it applies pressure against the side of the stock. This keeps the stock tight against the fence. (See page 17 for a description on how to make a featherboard for the table saw.)

**THE RULES.** Finally, kickback can often be prevented by employing a few simple rules:

- Don't rip a piece of stock that's wider than it is long. It's difficult to keep the piece from binding.
- Never use the miter gauge and the fence together when making a *through* cut. (It's okay on a groove or a dado.)
- Keep a supply of push sticks or blocks handy. This way you won't be tempted to rip thin pieces without them.
- Don't stand in the path of the blade. This way if the piece does kick back, you won't be in the way.
- Don't let go of the workpiece until it has been pushed *completely* past the blade.

Finally, the most important thing to remember when using any power tool is that *you're responsible* for your own safety.

Special Note: As you may have noticed, we don't show a guard on the table saw. This is done so we can show the operation more clearly. Please, use your guard whenever possible.

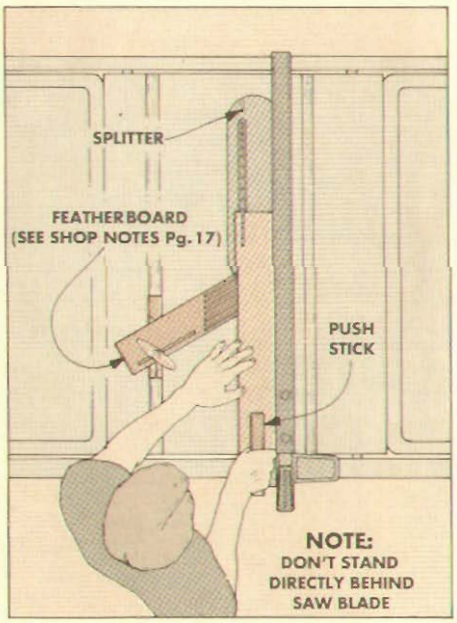

# Hold-Down Clamp

This is a great little hold-down clamp that can be mounted to a workbench, on a drill press table, or as part of a ripping jig for the table saw, see photos at right.

The clamp is designed with one side of the arm shorter than the other. It pivots on a cylindrical block to allow a range of options in the thickness of stock you can clamp (up to 3"), refer to Fig. 2.

The clamp is held in place with a large wing nut that's screwed onto a 6"-long machine bolt, see Fig. 2. This machine bolt is screwed into a T-nut mounted in the top of the workbench or in a jig.

**ARM.** To make the arm, lay out the pattern on a 1½"-thick blank as shown in Fig. 1. Before cutting out the shape, bore a 7/16" hole through the top of the block for the machine bolt to pass through, see Fig. 3.

Next, cut out the half circle pivot block and save this piece, see Fig. 4.

To allow the arm to pivot around the machine bolt (as shown in Fig. 2), you need to bore out a clearance slot. Bore a series of holes through the bottom of the block all the way through to the pivot area, see Fig. 5.

Now you can cut the arm to shape on a band saw. Then clean out the slot with a chisel and file. To assemble the parts, insert the machine bolt through the arm and screw it into a T-nut mounted in a jig or bench, see Fig. 2. To keep the bolt from going too far, lock two hex nuts together to form a stop.

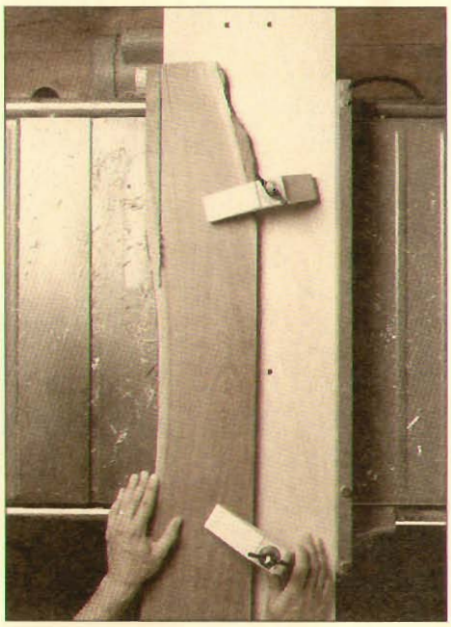

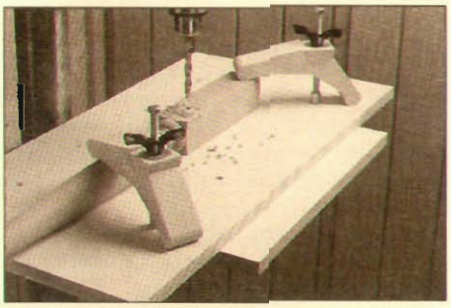

To tighten down the arm, you can make your own wing nut out of wood, see page 21. (Hardware for the clamp is available from *Woodsmith Project Supplies*, see page 31.)

When using this clamp, the idea is that the two sides of the arm are different lengths for various thicknesses of wood. This also allows you some flexibility in where the end of the arm is placed on the workpiece.

**RIPPING JIG.** I used these clamps to make a straight-line ripping jig, see photo. (For more on this jig, see page 29.)

**BENCH HOLD-DOWNS.** They also make great hold-downs on a workbench. Just drill ½" holes through the bench top and install T-nuts from below. Or, if your bench already has dog holes, slip a long bolt with a large washer up through a dog hole.

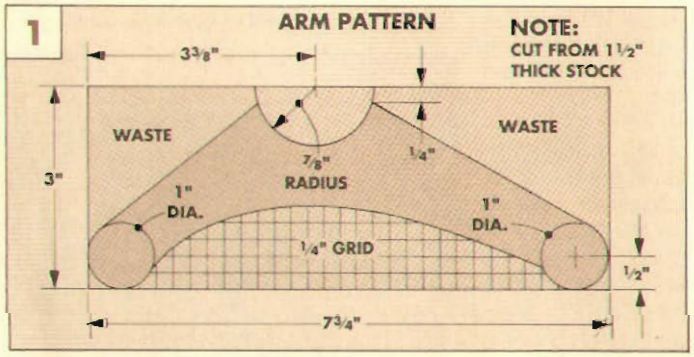


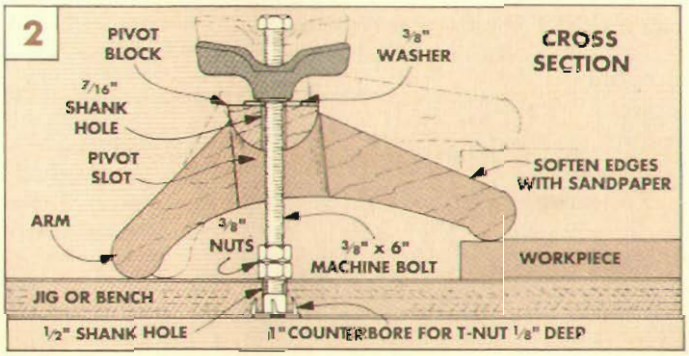


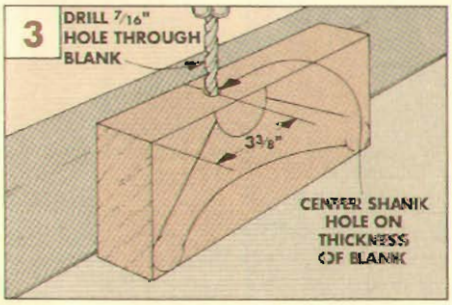


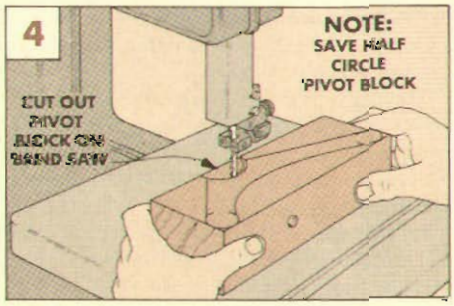


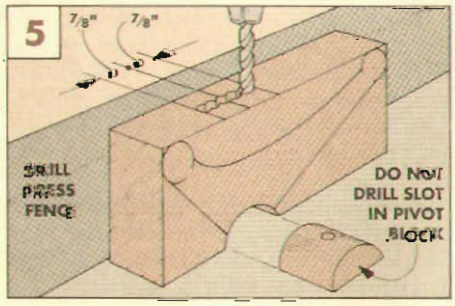

# Sources

### TALL CASE CLOCK

We worked with the Mason & Sullivan Co. to put together a kit of all the hardware and clock works needed to build the Tall Case Clock on page 6. (Note: We strongly recommend you have the kit in hand before you start construction of the Clock.)

Included with this kit are:

- (1) 8-Day Chain Driven Movement, Westminster Chime (plays on the quarter hour plus a full count on the hour). Includes Silence Feature, Brass Weight Shells, And Brass Chains.
- (1) Standard Pendulum With Brass Bob. Note: The pendulum is made of light colored wood. You may want to stain it to match the wood used for your clock case.
- (1 set) Weight Fillings
- (1 set) Black Clock Hands, Serpentine Style
- (1) Dial (Clock Face), Enameled Aluminum, 11" x 11" With 9½" Time Ring (Note: Available With Arabic Or Roman Numerals. Specify the style you want, see photo above right.)
- (1) Instructions For Mounting Movement and Chimes
- (2 pair) Brass Butt Hinges, Spun Tips, 2" Long x 1⅝" Open Width, Includes Screws
- (2) Brass Knobs, ⅝" Dia.
- (2) Magnetic Door Catches

The following items are needed to build the Tall Case Clock but are *not* included with this kit:

- Wood and finish for the case of the clock.
- Flathead woodscrews and ½" brads to assemble the case.
- Single strength window glass for the doors.
- One 14"-long piece of stiff wire (about 19 gauge) to be used with chime silencer (see page 14).
- Wall mounting hardware (see bottom of page 6).

You can order the *Woodsmith* Tall Case Clock Works and

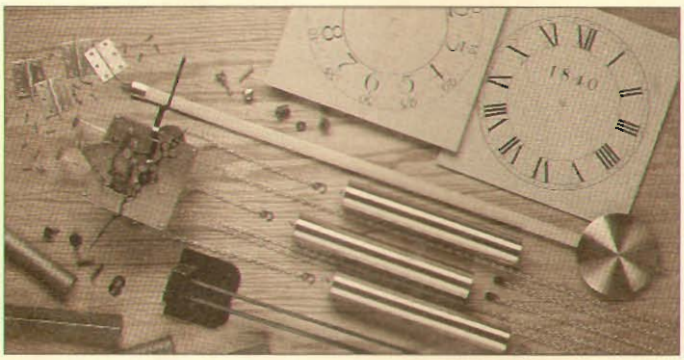

Hardware Kit only from Mason & Sullivan. (This kit is *not* available from **Woodsmith Project Supplies**.)

Mason & Sullivan
586 Higgins Crowell Road
West Yarmouth, MA 02673
(508) 778–0475 (8:00 AM to 4:30 PM Eastern Time)

The prices below do not include shipping and handling. These kits are *not* listed in the Mason & Sullivan catalog. Choose the dial you want, and then order from Mason & Sullivan using the following order numbers:

**0206X** Woodsmith Clock with Roman Numeral Dial ..... $177.00
**0205X** Woodsmith Clock with Arabic Numeral Dial ..... $177.00

### ROLLER STAND

All of the hardware needed to build the Roller Stands shown in this issue is available from **Woodsmith Project Supplies**. We're offering two kits: one kit to build the standard size Roller Stand shown on page 18 and another kit to build the wide Roller Stand shown at the bottom of page 23. (Note: The wood, flathead screws for assembly, and electrician's tape are *not* included in either kit.)

**Roller Stand Hardware**

**770-100** Standard Roller Stand Hardware ..... $34.95

- (5) Large Plastic Wing Nuts With Metal Inserts, 3" Across Wings, Threaded To Accept Standard ⅜" Bolt
- (4) ⅜" x 4" Carriage Bolts
- (1) ⅜" x 2" Carriage Bolt
- (1) ⅜" Fender Washer
- (11) ⅜" Washers
- (4) ⅜" Nuts
- (4) ⅜" T-Nuts
- (10) Hardwood Wheels, 2" Dia., ⅜" Dia. Axle Hole
- (5) Rods, ⅜" x 11⅞", Cold-Rolled, Zinc-Plated Steel
- (5) Pieces Of PVC Plastic Pipe, Schedule 40, 2" I.D., 11" Long.
- (30) Brads For Securing Pipe To Wheels, 17-gauge, ¾" long

**770-150** Large Roller Stand Hardware Kit ..... $44.95

- This kit includes everything listed above, but the steel rods are 22⅞" long and the pieces of PVC pipe are 22" long.

### MAILBOX

All of the hardware needed to build the Mailbox shown on page 24 is available in a kit from **Woodsmith Project Supplies**. (Note: The kit does *not* include wood, finish, waterproof epoxy glue, wood screw plugs, or wall mounting screws.) The silicone sealant can be ordered separately, see below.

**Mailbox Hardware**

**770-200** Mailbox Hardware Kit ..... $6.95

- (10) No. 8 x 1¼" Woodscrews, Zinc-Plated, Phillips Flathead
- (24) No. 6 x ½" Woodscrews, Zinc-Plated, Phillips Flathead
- (4) No. 12 x 1½" Woodscrews, Brass, Slotted Roundhead
- (1) Round Brass Knob, 1" Dia.
- (1) Extension Spring, 6" Long
- (1 ft.) Brass Chain

**765-305** Dow Silicone Sealant (3-oz. tube) ..... $3.29

### HOLD-DOWN CLAMP

**Woodsmith Project Supplies** is offering a hardware kit and a full-size pattern needed to make two hold-down clamps as shown on page 30. Each kit includes enough hardware to make two clamps and twelve T-Nuts as mounting "stations." (Wood is *not* included.)

**Clamp Hardware**

**770-300** Hold-Down Clamp Hardware ..... $6.95

- (2) Large Plastic Wing Nuts With Metal Inserts, 3" Across Wings, Threaded To Accept Standard ⅜" Bolt
- (2) ⅜" x 6" Machine Bolts, All-Thread, Hexhead
- (2) ⅜" Washers
- (4) ⅜" Nuts
- (12) ⅜" T-Nuts
- (2) Full-Size Arm Patterns

## ORDER INFORMATION

### BY MAIL

To order by mail, use the form enclosed with a current issue or write your order on a piece of paper, and send with a check or money order. (Include $3.50 handling and shipping charge with each order.) IA residents add 4% sales tax; CA residents add 6.25% sales tax. Send to:

**Woodsmith Project Supplies**
**P.O. Box 10350**
**Des Moines, IA 50306**

### BY PHONE

For faster service use our Toll Free order line. Phone orders can be placed Monday through Friday, 8:00 AM to 5:00 PM Central Standard Time.

Before calling, have your VISA or Master Card ready.

**1-800-444-7002**

*Allow 4 to 6 weeks for delivery. Note: Prices subject to change after October, 1990.*

# Final Details

## Tall Case Clock

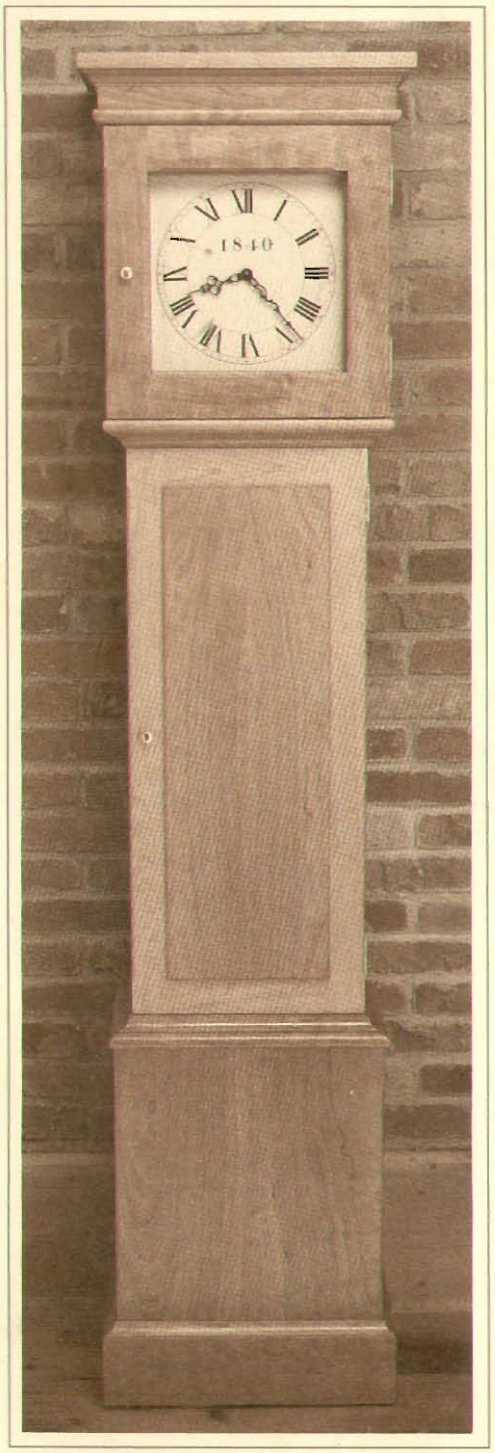


▲ *To give the Tall Case Clock a traditional Shaker appearance, this version features a Roman numeral dial and solid cherry door.*

## Mailbox

▲ *A mailbox for woodworkers. Made from white oak, it features solid frame and panel construction and a tip-out mail bin. For a personal touch, we routed in our name.*

## Roller Stand

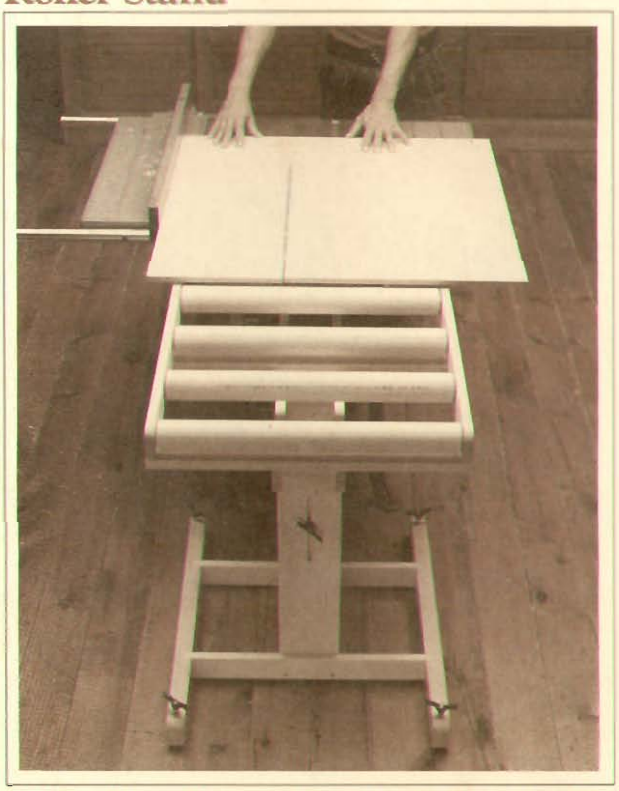

▲ *For cutting wide pieces, the optional wide roller stand can really make a difference. Each of the five rollers are almost two feet long and offer plenty of support.*